PRODUCT CATALOG

COMMERCIAL AND MILITARY

PRODUCT CATALOG

AUGUST 1999

Datron World Communications Inc.
3030 Enterprise Court
Vista, CA 92083, U.S.A.
Phone: (760) 597-1500 Fax: (760) 597-1510
E-mail: sales@dtwc.com
www.dtwc.com

DATRON WORLD COMMUNICATIONS INC. COMPANY OVERVIEW

Datron World Communications Inc. (DWC) is a world leader in high frequency (HF) and very high frequency (VHF) radio communications. The company manufactures and distributes a full line of radio products and communications systems to leading government, military, and industrial organizations in over 120 countries worldwide through a network of local sales and service representatives. Datron offers its customers reliable equipment and comprehensive services to satisfy specific mission requirements. It has been widely recognized as the "best value" supplier in the industry by offering high performance products with low overall life cycle cost.

Products

Datron manufactures both tactical and professional HF equipment and tactical manpack, vehicular, and handheld VHF equipment. All products are designed for reliable operation in harsh environments and are rigorously tested for compliance to exacting military and industrial standards.

Datron's **HF radio products** include a complete line of professional and tactical transceivers, accessories, and ancillary equipment that can be configured to satisfy a wide variety of voice and data applications. The 125W 7000-series transceivers are offered in a professional model, a rugged immersible package, and a transportable "Flyaway" configuration. All have FED-STD-141A ALE, high-level encryption, and embedded DSP voice enhancement options. Accessory equipment includes 400W and 1000W RF amplifiers, automatic antenna tuners, full-function remote control units, and power supplies. A complete line of peripheral devices are also available. A 20W tactical manpack, the PRC1099A, provides portable HF communications and forms the core of its own 20W, 100W, and 400W systems for use in a variety of mobile configurations.

The tactical **VHF products** include handheld, manpack, and vehicular radio systems that operate in either clear channel or full-band frequency hopping modes with complementary digital encryption. The PRC1077 is a fixed frequency 30 to 87.975 MHz tactical manpack which is compatible in form, fit, and function with existing inventories of mounts, antenna, batteries, and audio devices. The PRC1088 adds full-band frequency hopping and digital encryption capability to basic 1077 functionality. The latest VHF product is the new Spectre V-series of VHF/FM tactical transceivers, which features both single-channel and hopping/encrypted models. The Spectre V offers complete voice and data mode capabilities and a unique user interface, which is available in multiple languages. The PRC1060/1070/1080 is a family of 30 to 87.975 MHz handheld radios; all are completely interoperable with the 1077, 1088, and Spectre V-series in fixed frequency modes. The PRC1080 also has ECCM and COMSEC capabilities compatible with the PRC1088. A complete line of accessories and vehicular systems, including mobile mounts and high-power RF booster amplifiers, are also available.

Datron also offers a wide range of data products and systems, to satisfy requirements ranging from professional applications to full MIL configurations. Custom message handling software permits the quick and reliable transfer of text, facsimile, or imaging data via HF radio link. Network management software offers automatic equipment control, message relay and gateway capabilities, and Internet, LAN and e-mail connectivity. These systems also provide least-cost-routing services that allow prioritization of traffic to permit HF to serve as a backup to conventional land and satellite systems at a much lower cost to the user.

Systems Capabilities

Datron also designs and implements complete communication systems. Project management, site surveys, OEM equipment sourcing, systems integration, and comprehensive installation and training services are all part of Datron's systems capability. Flexibility, coupled with a unique ability for customization, allows the company to rapidly respond to challenging customer requirements. The results are system solutions that are expertly tailored to the satisfaction of each customer.

Summary
Datron's radio products are recognized for their ease of operation, serviceability, and affordability. Factory and field training courses are offered for all systems and equipment. With over 25 years of design and manufacturing experience, the Datron organization places strong emphasis on product research, quality, and total customer satisfaction. Datron's global network of factory-trained sales and service representatives allows fast, local solutions to customer requirements. The company operates an ISO9001-certified facility in Vista, California, U.S.A.

DATRON SERVICE INFORMATION

Engineering Assistance
Your communications requirements are important to us. Applications engineering assistance is available at Datron to answer questions concerning the use of our products in your communications systems. This assistance is a Datron service that is available free of charge. For more information, contact your Datron Representative.

Maintenance Facilities
Datron has experienced repair technicians on staff that are qualified to install, maintain, and repair Datron communications equipment. If you should need direct factory assistance, Datron is prepared to supply factory-trained field service personnel to assist in the installation, operation, maintenance, and service of your communications equipment. We also have trained representatives in many areas of the world that can provide this maintenance service. For more information, contact your Datron Representative.

Technical Training
Datron provides comprehensive training in the installation, operation, and maintenance of all Datron equipment. Training courses can be designed to meet individual customer requirements. These courses can be held either at our manufacturing facility in Vista, California, or at the customer's site. All courses are scheduled on a first-come, first-served basis. For more information, contact your Datron Representative.

DATRON PRODUCT CATALOG – NAVIGATION GUIDE

Table of Contents
The Table of Contents is arranged so that you can easily locate the particular product or system that you need. Refer to major sections by referencing the name and number on the tab pages. Major sections and subsections are listed throughout the Table of Contents by page number. Section 3 of this catalog has been reserved for the Spectre H™ Transceiver, which will be sent to all registered catalog owners upon release of the product.

Additional Literature and Product Notes
Datron has published additional information on the products described in each section of the catalog. This includes focused data sheets and brochures. You may obtain this literature either from our website (http://www.dtwc.com) or by using the convenient reply card located in the back of the catalog.

Index
There is a comprehensive index at the back of the catalog which references products, key terms, and other useful information.

Disclaimer and Updates
Because Datron is continually attempting to upgrade the quality of its products and systems, all information contained in this catalog is subject to change without notice. Updates to the catalog will be published on a periodic basis and will consist of pages or entire sections that can easily be added to your existing catalog. A brief, descriptive note will explain where to add the new pages and what (if any) pages to remove.

Comments and Requests for Information
We encourage comments on our product catalog. In the back of the catalog you will find a page that will allow you to comment on the quality, format, and content of the catalog if you choose to do so. The back of the "Comments" page contains the address of the Marketing Communication Department at Datron. Your suggestions or requests for additional information should be sent directly to that address for rapid processing.

TABLE OF CONTENTS

RT7000-SERIES HF TRANSCEIVERS 1-1

RT7000-Series Transceivers 1-2
RT7110 Data Transceiver 1-3
RT7000-Series Options 1-3
Transceiver Remote Controls 1-4
Accessory Equipment 1-5
Miscellaneous Accessories 1-5
Amplifiers 1-5
Data Accessories 1-5
Power Supplies 1-9
Broadband Antennas 1-10
Narrow-band Antennas 1-10
Antenna Tuners 1-11
Telephone Interface Devices 1-11
HF/VHF Retransmission Equipment 1-12
Pre/Postselector 1-12
Mounting Kits 1-13
Shock and Mobile Mounts 1-13
Racks and Rack Mounts 1-13
Stack Mount Kits 1-14
Audio Accessories 1-14
System Configurations 1-14

RM7000 AND RS7000 125W HF SYSTEMS 1-17

RM7000 1-17
RS7000 1-17

RM7100 AND RS7100 400W HF SYSTEMS · · · 1-36

RM7100 · · · 1-36
RS7100 · · · 1-36

RS7500 1000W HF SYSTEM · · · 1-52

RS7500 · · · 1-52

RT7000-SERIES TRANSCEIVER CABLES, SPARES, AND MANUALS · · · 1-60

Cables · · · 1-60
Spare Module Assemblies · · · 1-61
Maintenance Kits · · · 1-61
Spares Kits · · · 1-62
Manuals · · · 1-63

PRC1099A 1.6-30 MHz MANPACK TRANSCEIVER · · · 2-1

Tactical Manpack PRC1099A Radio · · · 2-2
Options · · · 2-2
Batteries · · · 2-2
Battery Chargers/Power Supplies · · · 2-3
Charging Cables · · · 2-3
Carrying Accessory · · · 2-3
Audio Accessories · · · 2-4
Manpack and Wire Antennas · · · 2-4
PRC1099A Manpack System · · · 2-5

PRC1099A 1.6-30 MHz VEHICULAR SYSTEM · · · 2-8

Vehicular Adapters · · · 2-9
Amplifiers · · · 2-9
Vehicular Antennas · · · 2-9
Base and Deployable Antennas · · · 2-10
Vehicular Antenna Tuners · · · 2-10
Vehicular Control and Audio Accessories · · · 2-10
Mobile/Fixed Power Accessories · · · 2-11

PRC1099A TRANSCEIVER CABLES, SPARES, AND MANUALS · · 2-25

Cables · · · · · 2-25
Spares Kits · · · · · 2-26
Spare Module Assemblies · · · · · 2-26
Manuals · · · · · 2-27

TW7000-SERIES HF TRANSCEIVERS · · · · · 4-1

TW7000-Series Transceivers · · · · · 4-2
Options· · · · · 4-2
Transceiver Remote Controls · · · · · 4-3
Accessory Equipment · · · · · 4-4
Miscellaneous Accessories · · · · · 4-4
Amplifiers · · · · · 4-4
Data Accessories· · · · · 4-4
Power Supplies · · · · · 4-8
Broadband Antennas· · · · · 4-8
Stationary Dipole Antennas · · · · · 4-9
Narrow-band Antennas · · · · · 4-9
Antenna Tuners · · · · · 4-9
Telephone Interface Devices · · · · · 4-10
HF/VHF Retransmission Equipment· · · · · 4-10
Pre/Postselector· · · · · 4-11
Mounting Kits · · · · · 4-11
Audio Accessories · · · · · 4-11
TW7000 System Configurations · · · · · 4-13

TM7000/TS7000 125W HF SYSTEMS · · · · · 4-15

TM7000 · · · · · 4-15
TS7000 · · · · · 4-15
Rack Cabinets · · · · · 4-26

TS7100 500W HF SYSTEM · · · 4-26

TS7100 · · · 4-26
Equipment Heights for Racking · · · 4-27
Blank Rack Panels · · · 4-27
Rack Cabinets · · · 4-30

TS7500 1000W HF SYSTEM · · · 4-30

TS7500 · · · 4-30
Equipment Heights for Racking · · · 4-31
Blank Rack Panels · · · 4-31

TW7000 TRANSCEIVER CABLES, SPARES, AND MANUALS · · · 4-36

Cables · · · 4-36
Spares Kits for the TW7000 · · · 4-37
Spare Module Assemblies · · · 4-38
Maintenance Kits · · · 4-38
Manuals · · · 4-39

TW7000F HF TRANSCEIVER · · · 5-1

TW7000F Transceivers · · · 5-1
Options · · · 5-2
Portable Power Supply · · · 5-3
Fixed/Portable Broadband Antennas · · · 5-3
Untuned Antennas · · · 5-3
Remote Control · · · 5-3
Telephone Coupler · · · 5-4
Audio Accessories · · · 5-4
Amplifiers · · · 5-4
Miscellaneous Options and Accessories · · · 5-4

TW7000F TRANSCEIVER CABLES, SPARES, AND MANUALS · · · 5-10

Cables · · · · · 5-10
Spare Module Assemblies · · · · · 5-10
Spares Kits · · · · · 5-11
Manuals · · · · · 5-11

DATA COMMUNICATION PRODUCTS · · · · · 6-1

5200-Series Modems · · · · · 6-2
5300-Series Modems · · · · · 6-2
110A-Series Modems · · · · · 6-3
Modem Accessories · · · · · 6-3
Software Packages for Data Communication · · · · · 6-4

DATA COMMUNICATION SYSTEM CONFIGURATIONS · · · · · 6-6

DATA COMMUNICATION CABLES, SPARES, AND MANUALS · · · 6-21

Cables · · · · · 6-21
Spares Kits · · · · · 6-21
Manuals · · · · · 6-22

PRC1060/1070/1080 SQUAD RADIO · · · · · 7-1

Squad Radios · · · · · 7-2
Upgrade Kit · · · · · 7-2
Crypto Management Systems · · · · · 7-2
Batteries · · · · · 7-3
Battery Chargers · · · · · 7-3
Carrying Accessories · · · · · 7-3
Audio Accessories · · · · · 7-3
Manpack Antennas · · · · · 7-3
Vehicular Systems · · · · · 7-4

VEHICULAR CONFIGURATIONS FOR THE PRC1060/1070/1080 SQUAD RADIO 7-4

Vehicular Mounts 7-5
Vehicular Antennas 7-5

PRC1060/1070/1080 CABLES, SPARES, AND MANUALS 7-8

Cables 7-8
Spares Kits 7-8
Spare Module Assemblies 7-8
Manuals 7-9

PRC1077 TACTICAL VHF FM MANPACK RADIO 8-1

Tactical Manpack 8-2
Option 8-2
Batteries 8-2
Battery Chargers/Power Supplies 8-2
Charging Cables 8-3
Audio Accessories 8-3
Carrying Accessories 8-4
Manpack and Long-Range Antennas 8-4
Retransmission Equipment 8-4
PRC1077 Manpack System 8-5

PRC1077 TACTICAL VHF FM VEHICULAR SYSTEMS 8-8

Vehicular Mounts and Adapters 8-9
Amplifiers for the PRC1077 8-9
Vehicular Antennas 8-9
Vehicular Control and Audio Accessories 8-10
Vehicular Power Accessories 8-10

PRC1077 TRANSCEIVER CABLES, SPARES, AND MANUALS · · · 8-19

Cables · · · · · 8-19
Spares Kits · · · · · 8-20
Spare Module Assemblies · · · · · 8-20
Manuals · · · · · 8-21

PRC1088 TACTICAL VHF FM MANPACK RADIO · · · · · · · · · · · 9-1

Tactical Manpack · · · · · 9-2
20W Manpack Amplifier · · · · · 9-2
Crypto Management Systems · · · · · 9-2
Batteries for the PRC1088 · · · · · 9-3
Battery Chargers/Power Supplies · · · · · 9-4
Charging Cables · · · · · 9-4
Carrying Accessories · · · · · 9-5
Audio Accessories · · · · · 9-5
Manpack and Long-Range Antennas · · · · · 9-5
Retransmission Equipment · · · · · 9-5
PRC1088 Manpack System · · · · · 9-6

PRC1088 TACTICAL VHF FM VEHICULAR SYSTEMS · · · · · · · 9-9

Vehicular Adapters · · · · · 9-9
Amplifier · · · · · 9-10
Vehicular Antennas · · · · · 9-10
Vehicular Audio Accessories · · · · · 9-10
Vehicular Power Accessories · · · · · 9-10
Vehicular Retransmission Equipment · · · · · 9-10

PRC1088 RADIO CABLES, SPARES, AND MANUALS · · · · · · · 9-13

Cables · · · · · 9-13
Spares Kits · · · · · 9-13
Spare Module Assemblies · · · · · 9-14
Manuals · · · · · 9-14

SPECTRE V® TACTICAL VHF TRANSCEIVERS · · · · · · · · · · · · 10-1

Spectre V Transceivers · 10-2
Transceiver Features · 10-2
Internal Options · 10-3
Power Source Accessories · 10-4
Tactical Antennas · 10-4
Audio Accessories · 10-5
Retransmission Equipment · 10-5
Carrying Accessories · 10-5
Data Accessories · 10-5
ECCM and COMSEC Accessories · 10-6
Spectre V Manpack System · 10-7

VEHICULAR CONFIGURATIONS FOR THE SPECTRE V TRANSCEIVERS · 10-8

Vehicular System Adapters · 10-9
Vehicular Amplifier · 10-9
Vehicular Antennas · 10-9
Vehicular Audio Accessories · 10-9
Vehicular Power Accessories · 10-9
Vehicular Systems · 10-10
Low-Power Mobile System · 10-12
Dual Low-Power Mobile System · 10-13
High-Power Mobile System · 10-14
Dual High-Power Mobile System · 10-15

PRC2100V RADIO CABLES, SPARES, AND MANUALS · · · · · · 10-16

Cables · 10-16
Spares Kits · 10-16
Spare Module Assemblies · 10-16
Manuals · 10-17

POWER LINE CONDITIONERS, SURGE SUPPRESSERS, AND GROUNDING KITS 11-1

Surge Protection 11-1
Lightning Protection 11-1
AC Power Line Surge Suppressers 11-1
AC Line Conditioning 11-1
Ordering Information 11-2
Rack Grounding Kits 11-2
Grounding Documentation 11-2

SPARES 12-1

Spares Introduction 12-1
Standard Spares Kits 12-1
Individual Piece Parts and Modules 12-1
Custom Spares 12-2
Notes 12-2
Spare Module Assemblies, Combined Listing 12-3
Spares Kits, Combined Listing 12-5

MANUALS 13-1

Manuals, Combined Listing 13-1

CABLES 14-1

Cables, Combined Listing 14-1

RT7000-SERIES HF TRANSCEIVERS

- 1.6 MHz-30 MHz (receive 100 kHz-30 MHz)
- Up to 1000 Memory Channels
- DSP-Based Voice Processing
- Synthesized 10 Hz Steps
- 125W PEP/100W Average
- BITE Capability
- Multi-Protocol Remote Control Capabilities
- Multi-Mode Capabilities
- Alphanumeric LCD
- Dual ALE Capability

The RT7000-series is a rugged, 1.6-30 MHz HF transceiver family designed to provide long distance voice and data transmission capability over HF. A complete line of accessories including RF booster amplifiers, antenna tuners, and power supplies are available to complement the core RT7000 and form system configurations with RF power levels up to 1000W. High-speed modems, data terminals, and application software packages help configure even the most complex network data system.

All models in the RT7000-series are waterproof and environmentally rugged to meet the wide variety of military specifications including MIL-STD-810 for shock, vibration, temperature, humidity, sand, and dust. The transceivers are available in both 12V and 28V versions for use in all types of vehicles. The RF output power is conservatively rated at 125W, PEP, and 100W, average, in a continuous key-down mode. Full protection is provided against reverse polarity, overvoltage, and antenna mismatch. Automatic BITE capability, with fault detection down to the module level is standard in all RT7000s and allows even unskilled operators to easily repair the radio at the field level.

Other plug-in features that can easily be added to the standard transceiver include FED-STD-1045A compatible, automatic link establishment (ALE), high-level encryption, DSP-based voice processing, and special STANAG compliant data filters. A variety of remote control options including extended front panel control; full function, long range remote control; and computer control are offered for use with any of the transceivers.

RT7000-Series Transceivers

Supplied with operator manual and listed interface cables. Order technical manual separately.

RT7000-12
SSB/FSK synthesized 1.6-30 MHz ruggedized transceiver (receive 100 kHz-30 MHz), 12 Vdc, 125W PEP/100W average (three programmable levels), USB, LSB, CW and AME modes are standard. Simplex and semi-duplex, continuous coverage, 10 Hz steps and keypad programmable, nonvolatile storage on 256 channels (expandable to 1000). Comes standard with an RS232 serial interface, factory set to 9600 baud. (Optional RS422/423/485.) Complete with antenna tuner interface (100 channel memory included) and multiple group scanning. Meets MIL-STD-810 for operation under severe vibration and shock; waterproof and submersible. Supplied with C991556 dc power cable, antenna connector and operator manual.

RT7000-28
Identical to the RT7000-12 except requires 28 Vdc input voltage.

RT7000C-12
RT7000-12 designed for control from external computer only. Standard front panel is replaced with a blank front panel.

RT7000C-28
Identical to the RT7000C-12 except requires 28 Vdc input voltage.

RT7000E-12
12 Vdc extended control model. Standard front panel is replaced with line driver front panel and is used with RT7201E control console for remote operation up to 15m (50 ft.). Order C991943 control cable separately (standard length is 9m).

RT7000E-28
Identical to the RT7000E-12 except requires 28 Vdc input voltage.

RT7000PP-12
Identical to the RT7000-12 modified to work with the RT5830 pre/postselector.

RT7000PP-28
Identical to the RT7000-28 but modified to work with the RT5830 pre/postselector.

A detailed diagram showing this complete equipment configurations is shown following the description of the RT5830.

RT7000RF-12
RT7000-12 designed for long haul remote only use beyond 2 km. Standard front panel is replaced with a blank front panel. An internal modem card (7000RF) is installed. Used with RT7201F for full function FSK remote control. Order control cable separately.

RT7000RF-28
Identical to the RT7000RF-12 except requires 28 Vdc input voltage.

RT7000RI-12
RT7000-12 designed for remote only use up to 2 km. Standard front panel is replaced with a blank front panel; an internal modem card (7000RI) is installed. Used with RT7201I for full-function, real-time, ISDN remote control. Order control cable separately.

RT7000RI-28
Identical to the RT7000RI-12 except requires 28 Vdc input voltage.

RT7000RX-12
RT7000 receiver only, with full features of the RT7000.

RT7000RX-28
Identical to the RT7000RX-12 except requires 28 Vdc input voltage.

RT7000TX-12
RT7000-12 transmitter only, with full features of the RT7000.

RT7000TX-28
Identical to the RT7000TX-12 except requires 28 Vdc input voltage.

RT7110 Data Transceiver

The RT7110 is a version of the RT7000 with embedded MIL-STD-110A modem capability. The modem is a separate PC card that is programmed from an external computer. Like the RT7000, the RT7110 is completely waterproof and packaged in a rugged case designed for use in severe environments. It comes standard with rubber feet suitable for desktop mounting and can also be stack mounted or rack mounted. The RT7110 is available in two models, the RT7110-12 (+12 Vdc input) and the RT7110-28 (+28 Vdc input).

The addition of the internal modem provides enhanced data capability to the transceiver. The RT7110 has the capability of transmitting and receiving from 50 to 4800 bits per second in a standard 3 kHz single-sideband HF radio channel. It is able to accommodate MIL-STD-188-110A, NATO STANAG 4285, and binary FSK modes as standard, provide full-duplex/half-duplex operation, and offer a synchronous or asynchronous DTE interface.

The RT7110 can be used with any computer to make up a complete data system to permit reliable, error free, high-speed data transfer over HF radio links. Datron's HFCOM2 is a software package which can be used on any standard PC running in a Windows® environment. It allows a user to set up radio and ALE parameters, configure the modem, and transfer data files using its proprietary adaptive ARQ protocol.

RT7000-Series Options

Prices include factory installation at the time the radio is ordered. For field installation, contact your Datron Representative.

7000ACH
Additional channels. Increases operational channels to 1000.

7000ALE
FED-STD-1045A ALE module provides fully compatible system for ALE operations, including high-speed scanning, sounding, link quality analysis, and send/receive orderwire message capability. Provides selective calling as well as "best available frequency" selection. Use external computer running Datron's 9000RAD software or alphanumeric keypad of radio for orderwire message composition. Custom LCD provides alphanumeric display of message. Includes real time clock option (7000CLK). This option comes standard with the RT7110.

7000ENCR
Encryption module provides high level digital encryption of voice transmissions. For information on the key management system, contact your Datron Representative. Not available on the RT7110.

Note: U.S. State Department export license is required for shipping 7000ENCR outside of the United States.

7000HS
High-stability option. Provides frequency stability of ±0.1 PPM. Comes standard on RT7110.

Note: The 7000HS option is recommended for high-speed data use (MIL-110A modem) and for use with ALE (7000ALE).

7000NB
Impulse-type noise blanker. For use in high noise environments.

7000RCDR
Combines receive and transmit audio and routes them to Accessory #2. Typically used with a continuous recording device to monitor RX and TX communications. It can also be used in a split system, with separate transmitter and receiver.

7000RF
Embedded modem assembly for RT7000 when used with the RT7201F remote control. Order one PC assembly for RT7000 when ordering an RT7201F.

7000RI
Embedded modem assembly for RT7000 when used with the RT7201I remote control. Order one PC assembly for RT7000 when ordering an RT7201I.

7000RS
RS422/423/485 input/output configures second serial port to provide data protocol specified by the user for external control of radio via computer. Format choice must be included with order. This option is in addition to the RS232 interface included as a standard feature with the RT7000.

7000TC
Provides all functions of Transcall, Selcall and TransAdapt. Selcall offers digital selective calling. Provides calling of selected station with automatic answer back and alarm. Selective calling stops scan. Transcall offers automatic path evaluation within selected multiple scan groups (ten channels suggested maximum per scan group). Establishes contact on "best available frequency" with automatic alarm. An external alarm signal is available for both Transcall and Selcall operation. TransAdapt offers automatic path evaluation based on "first acceptable frequency." Compatible with PRC1099A TransAdapt units.

7000VEM
DSP-based voice processing module. Contains sophisticated 2-level noise reduction algorithm used to enhance received speech by removing broadband noise from outside signal envelope, and removes discrete interfering tones that can jam speech processing. Not available on the RT7110.

7000WB1
Wide-band/data filter. Provides 300-3300 Hz data filter with tailored group delay; USB/LSB. Required for high-speed data use (MIL-110A modem). STANAG 4285 compliant. Comes standard on the RT7110.

Transceiver Remote Controls

RT7201E
Extended front panel control console for the RT7000E. Allows remoting of the front panel from the radio. Comes with mobile mount bracket and feet. Order control cable C991943 separately.

RT7201F
Full remote control (FSK). Full function remote control unit (RCU) using FSK signaling format. Supports all transceiver functions and options. Includes internal speaker and is powered from 10-30 Vdc. May be powered from PS9000 power supply. Distance bounded only by signal loss in cable (approximate maximum signal loss -20 dB). Supplied with C992042 dc power cable. Order C992306 control cable separately. If unterminated cables are required, order C992308 (specify length). Order optional C992034 ac power cord separately; specify ac voltage when ordering. Radio must have 7000RF option installed. Mobile mount bracket and feet are included.

RT7201I
Full remote control (ISDN). Same as TW7201F, except uses ISDN signaling format. Provides real time operation transparent to the operator. Link includes a spare 9600 bps serial channel. Supplied with C992042 dc power cable. Order C992306 control cable separately. If unterminated cables are required, order C992308 (specify length). Order optional C992034 ac power cord separately; specify ac voltage when ordering. Radio must have 7000RI option installed. Mobile mount bracket and feet are included.

Accessory Equipment for the RT7000-Series

Datron offers a wide variety of accessory equipment with the RT7000. The RT7000 can be configured for fixed station or mobile usage at RF power levels up to 10 kW. A complete line of both broadband and narrow-band antenna systems, power supplies, and data devices are also available to complement the base transceiver. The following pages summarize the Datron accessory equipment that can be used with the RT7000 and show the RF, control, and power cables necessary for proper interconnections.

Miscellaneous Accessories

C1021
Pre/postselector interface box (RT7000-series). Required to translate control data between the RT5830 pre/postselector and the RT7000PP. See the pre/postselector system diagram.

RT7000FAN-1
External fan cooling kit for the RT7000. Mounts on the back of the heatsink. Recommended for ALE or data applications.

Note: Owners of existing RT7000s who want to add the fan kit should contact your Datron Representative.

RT7000IOX
A 4:1 breakout box for the accessory connectors. Allows multiple accessory equipment to be used with the same radio accessory connectors.

Amplifiers for the RT7000-Series

All of the Datron RF booster amplifiers can be used in a desktop, rack-mount, stack-mount or shock mount configuration. In addition to the two amplifiers described below, the RT7000 can be used with Datron's TW1000B (described in the TW7000 section). All amplifiers are supplied less interface cables; the proper cables must be ordered separately.

RA1000
1000W PEP and average, solid-state broadband amplifier. Interfaced for fully automatic operation with Datron's RT7000-series, rated for continuous FSK operation, 28 Vdc (operational 20-32 Vdc). Order C991925 control cable, C991508 dc power cable, and C991510 RF cable separately.

RA400
400W PEP and average, solid-state broadband amplifier. Interface for fully automatic operation with Datron's RT7000-series. Meets MIL-STD-810 for operation under severe vibration and shock. Waterproof and submersible. Rated for continuous FSK operation, 28 Vdc (operational 20-32 Vdc). Order C991925 control cable, C991558 dc power cable, and C991510 RF cable separately.

Data Accessories

Datron offers a complete line of modems, software packages, and complementary data accessories to use with the RT7000. Data accessories, data applications, and system configurations are described in detail in the Data Communication Products section.

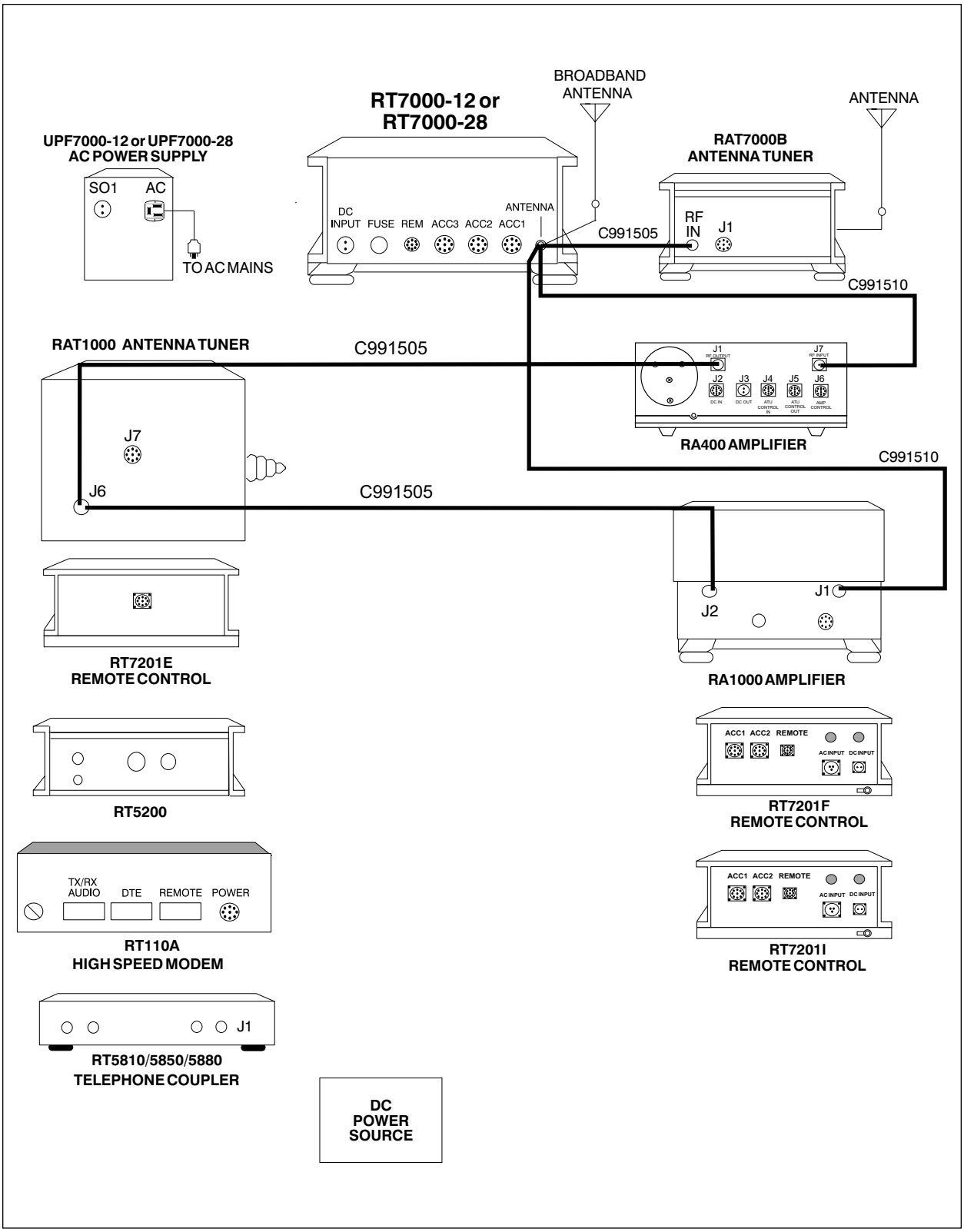

RT7000 Accessories-RF Cabling Diagram

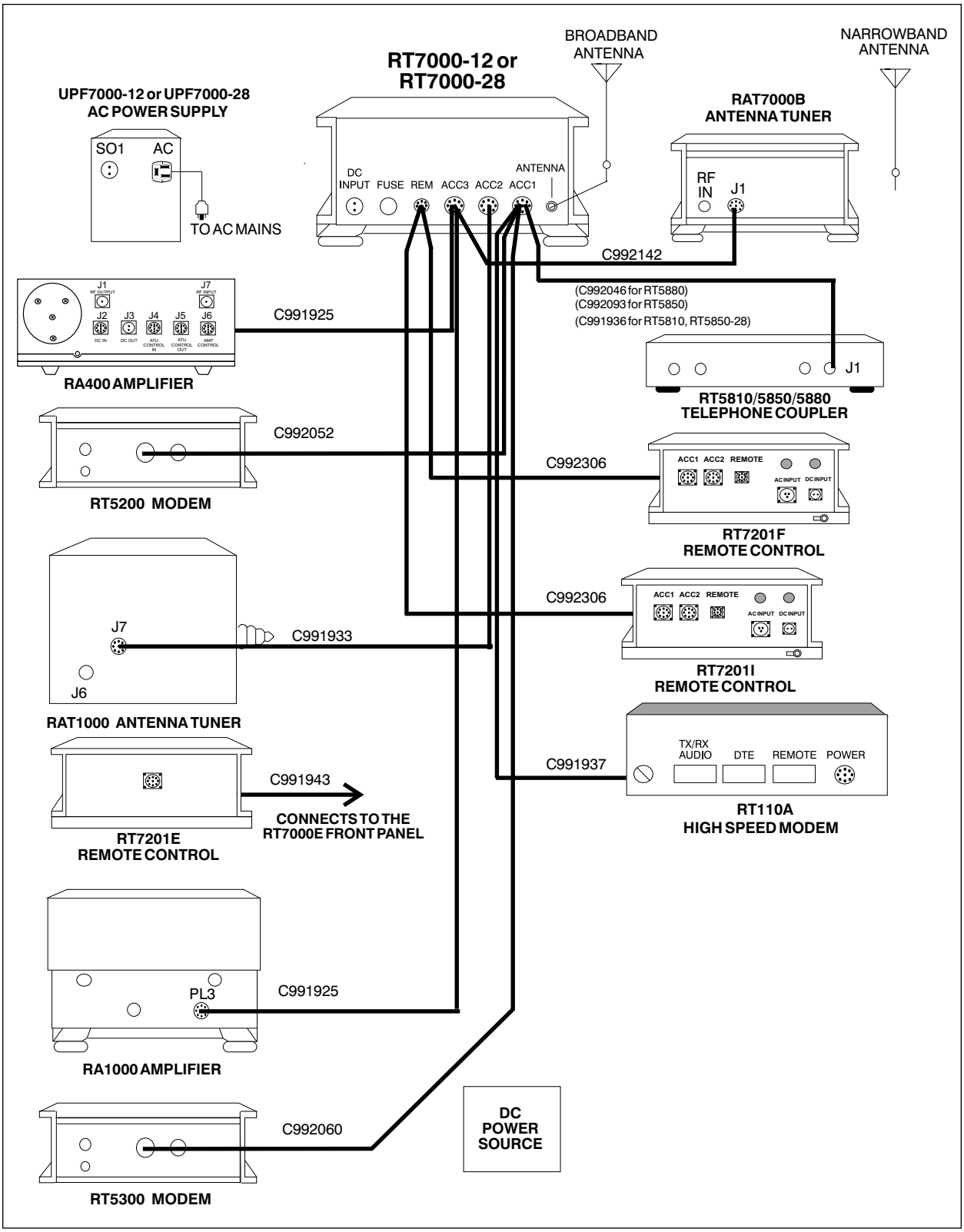

RT7000 Accessories-Control Cabling Diagram

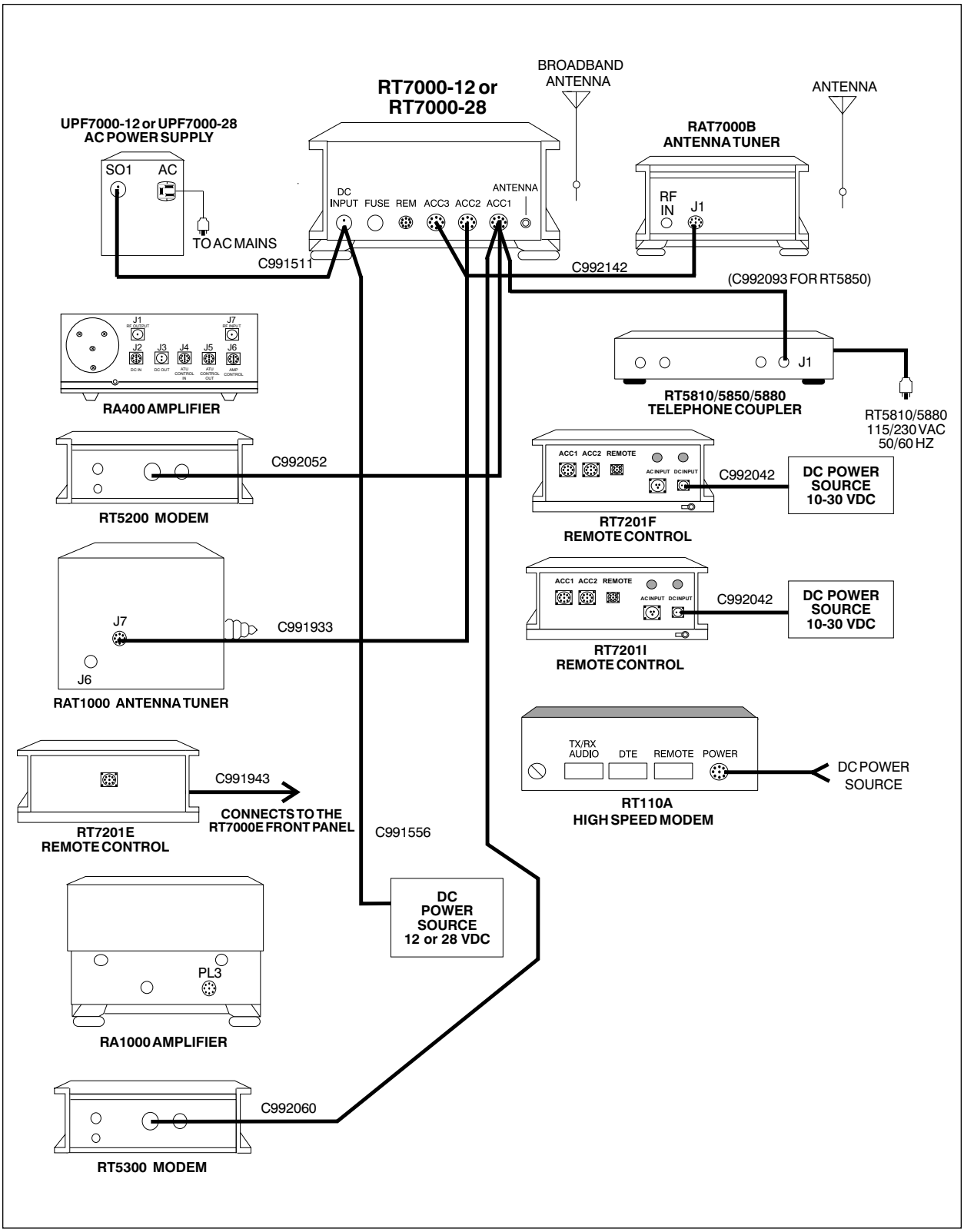

RT7000 Accessories-Power Cabling Diagram

Power Supplies for the RT7000-Series

RUPS100-12
12 Vdc linear supply designed to power the RT7000-12. Packaged in rugged case. Strappable for 115 or 230 VAC, 50-60 Hz. Uses C991511 power cable.

TWPSA
Provides automatic switching to customer supplied battery if external power fails. Power supply adapter for 12 Vdc and 28 Vdc input transceivers. Trickle-charges battery when primary power is available.

UPF7000-12
Continuous duty (FSK), 12 Vdc power supply designed to power RT7000-12. Automatic input voltage selection. Accepts 85-240 VAC, 47-63 Hz input. Packaged in rugged waterproof case. Order C991511 dc power cable separately.

UPF7000-12-220
Same as UPF7000-12 with standard 230 VAC plug on power cable.

UPF7000-28
Continuous duty (FSK), 28 Vdc power supply designed to power RT7000-28. Automatic input voltage selection. Accepts 85-240 VAC, 47-63 Hz input. Packaged in rugged waterproof case. Order C991511 dc power cable separately.

UPF7000-28-220
Same as UPF7000-28 with standard 230 VAC plug on power cable.

UPS100-28
Identical to the RUPS100-12 but has 28 Vdc output to power the RT7000-28. Uses C991511 power cable.

UPS1000
Linear, CVT-type, 28 Vdc output power supply for RA1000. Designed to power either RA1000 or RT7000-28/RA1000 in 1 kW systems in continuous duty (FSK) operation. Accepts either 115 or 230 VAC ±10% (jumper selectable), 50 or 60 Hz (jumper selectable); specify ac voltage requirement when ordering. Encased in rugged package suitable for stacking.

UPS1000SWA
Switching 230 VAC 50-60 Hz power supply with power factor correction. Output is 28 Vdc at 3000W to power the RA1000 amplifier (or equivalent) and an RT7000-28-series. The UPS1000SWA may also be used to power an RA400 amplifier and an RT7000-28-series from a 220V 50/60 Hz source. The power supply includes ac power cable, customer is to provide an appropriate power connector. Order dc power cables separately. The UPS1000SWA is green in color, supplied in stack mount configuration.

UPS500
Linear, CVT-type, 28 Vdc output power supply for RA400. Designed to power either RA400 or RT7000-28/RA400 in 400W systems in continuous duty (FSK) operation. Accepts either 115 or 230 VAC ±10% (jumper selectable), 50 or 60 Hz (jumper selectable); specify ac voltage requirement when ordering. Encased in rugged package suitable for stacking.

Broadband Antennas for the RT7000-Series

Datron offers a complete line of broadband HF antennas for fixed station use where space for a proper installation is available.

ABB100AN
Broadband antenna, 2-30 MHz, 125 W, supplied with 30m RG213 coaxial cable and type "N" connector. Extended length model for increased efficiency in 2-10 MHz range (antenna length is 43.3 m). Support mast not included.

ABB1000AN
Broadband antenna, 2-30 MHz, 1000 W, supplied with 30m RG213 coaxial cable and type "N" connector. Extended length model for increased efficiency in 2-10 MHz range (antenna length is 43.3 m). Support mast not included.

ABB100BN
Broadband antenna, 2-30 MHz, 125 W, supplied with 30m RG213 coaxial cable and type "N" connector (antenna length is 34.1 m). Support mast not included.

ABB1000BN
Broadband antenna, 2-30 MHz, 1000 W, supplied with 30m RG213 coaxial cable and type "N" connector (antenna length is 34.1 m). Support mast not included.

AMX
Portable antenna mast kit for ABB100 and ABB1000-series antennas. Includes 15m of mast sections, guy rings, dacron rope guys, guy stakes, mast base, raising halyard rope and pulley supplied in canvas carrying bag with guy hammer.

Narrow-band Antennas for the RT7000-Series

Narrow-band antennas, for both mobile and fixed station configurations are available. The narrow-band antennas all require an antenna tuner.

ALD-R
ALD-R is an HF, adjustable-length, deployable, dipole antenna covering the full 2 to 30 MHz frequency range. Comes complete with a laminate carrying bag and manual. 250W power handling capability with a maximum 1.7:1 VSWR at resonance, and features superior mechanical and cosmetic characteristics, which provides greater durability and field reliability.

AW7-M
7m fiberglass military whip; side-fed, with anodized aluminum mounting flange. For marine or fixed-station usage; 500W.

AW10
10.5m fiberglass rugged military whip; side-fed, with galvanized iron mounting flange. For marine or fixed-station usage; 5 kW.

MAR-12
Identical to MAR-16 but with a length of 3.6m.

MAR-16
Mobile antenna system. Four section, heavy-duty fiberglass military whip with flexible spring mobile base and mobile mounting bracket. Can be tied down horizontally to support NVIS communications. 4.8m (16 ft.) tall. Requires antenna tuner.

MAR-16T
Identical to MAR-16 with tilt whip adapter on flexible spring base. Allows locking antenna into four different positions.

NVISKIT
Transportable NVIS antenna kit consisting of AS-2259/GR NVIS antenna and ground base with a thumb screw connector. Requires antenna tuner. Order cable C992169 when used with the PRC1099A/AAW configuration. Order cable C992168 when used with RAT7000B antenna tuner.

RA-MAS
Mobile antenna system. Four section, heavy-duty fiberglass military whip with rigid mobile base and mobile mounting bracket. 4.8m (16 ft.) tall. Requires an antenna tuner.

RA-PAS
Portable antenna system, comprised of 120-series 9.6m, eight section military whip and 120-28 flange mounting base. Requires antenna tuner.

Antenna Tuners for the RT7000-Series

RAT1000
Automatic antenna tuner in ruggedized, immersible case, 1000W (3-30 MHz) for vehicular or marine installations, (2-30 MHz) for fixed installations. +28 Vdc operation. Provides automatic high-speed digital tuning on receipt of actuation signal from transceiver. Operates with most whip and long-wire antennas to 50m in length. Includes 10 channels for scanning or silent tuning applications. Supplied with C991620 0.5m antenna lead. Order C991933 (for RT7000) control cables and C991505 RF cable separately.

RAT7000B
Automatic antenna tuner in ruggedized immersible case, 150W. Operates with whips and long-wire antennas. VSWR monitoring and rapid digital tuning capability. Offers 100 channel memory capability for scanning or silent tune applications. Supplied with mobile mount and C991620 0.5m antenna lead. Order C991505 RF cable and C992142 control and power cable separately.

Telephone Interface Devices

RT5810
Rack-mounted telephone coupler provides interface between transceiver or other 600 ohm audio system and telephone line using DSP (Digital Signal Processing) technology. Includes VOX circuit for automatic voice switching. Provides automatic adjustments of levels and VOX. Proper operation requires 115 or 230 VAC (±15%), 47-63 Hz input. Olive drab color. Order C991936 interface cable for RT7000. Specify operating voltage when ordering.

RT5810-12
Identical to RT5810 with the additional capability of operating from 12 Vdc. Order C991936 interface cable for RT7000.

RT5810-220
Same as RT5810 with standard 230 VAC plug or ac power cord.

RT5810-28
Identical to RT5810 with the additional capability of operating from 28 Vdc. Order C991936 interface cable for RT7000.

RT5850
Identical to RT5810 except it is for desktop-style mounting. 12 Vdc operating voltage obtained from RT7000. Order C991936 interface cable.

RT5850-28
Identical to RT5850 except it operates from 28 Vdc. Order C992093 interface cable for RT7000.

RT5880
TRANSTEL radio/telephone terminal with built-in telephone and handset. Rack mounted. Used in conjunction with 7000-series radio equipped with the ALE option. Provides end-to-end dialing capability between PABX or public telephone networks. English language digitized voice prompts are standard. For custom voice prompts, contact your Datron Representative. Includes keypad for DTMF or pulse dialing, monitor speaker and serial port. Order C992046 cable for connection to RT7000. Requires 115 or 230 VAC (±15%), 47-63 Hz input. Olive drab color. Specify ac voltage when ordering.

RT5880-220
Same as RT5880 with standard 230 VAC plug on ac power cord.

HF/VHF Retransmission Equipment

RT5820
Retransmission unit. Provides interface between HF radios such as the RT7000-series and VHF radios such as the PRC1077. Incorporates DSP technology to provide positive voice detection while providing excellent immunity from false keying on noise. Rack mounted. For cabling details, contact your Datron Representative. Requires 115 or 230 VAC (±15%), 47-63 Hz input. Olive drab color. Specify ac voltage when ordering.

RT5820-12
Identical to RT5820 with the additional capability of operating from 12 Vdc.

RT5820-220
Same as RT5820 with standard 230 VAC plug on ac power cord.

RT5820-28
Identical to RT5820 with the additional capability of operating from 28 Vdc.

Pre/Postselector

RT5830
A pre/postselector that permits operation of co-located HF receivers and transmitters with frequency separation as low as 10%. Housed in a 1m rack mount package and designed to operate from 115 or 230 VAC or 12 or 24 Vdc. The RT5830 must be used with the RT7000PP version of the radio.

A 125W system configuration using the RT5830 is illustrated in the following diagram. All cable connections are shown. For more complex configurations involving high-power amplifiers, modems, and remote controls, contact your Datron Representative.

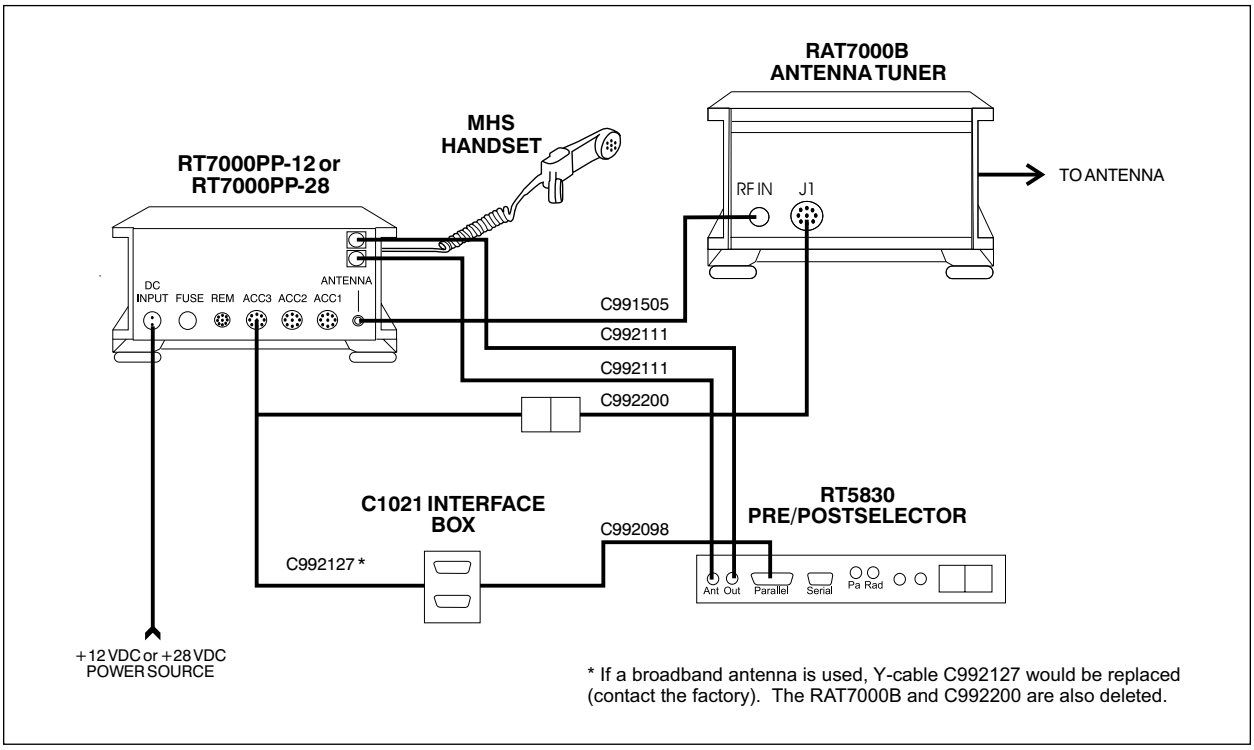

Pre/Postselector System-RT5830 with RAT7000B and Narrow-band Antenna, 125W

Mounting Kits for the RT7000-Series

Datron offers a complete line of shock, rack, and stack mounting assemblies for Datron's RT7000-series and accessory equipment.

The shock mounts isolate the equipment from high-impact shock and vibration. The equipment is retained in the mounting using four or six quick-detach, military-type butterfly clamps. Four separate military-type heavy-duty shock absorbers are used in each mount.

Rack mount kits allow mounting the equipment in standard 19 inch racks, while stack mount kits provide the brackets necessary to stack the equipment for use where space is limited.

Shock and Mobile Mounts for the RT7000-Series

RA1000-SM
Shock mount for RA1000 amplifier.

RA400-SM
Shock mount for RA400 amplifier.

RAT1000-SM
Shock mount for RAT1000 tuner.

RT110A-SM
Shock mount for RT110A-12 or RT110A-28.

RT5200SM
Shock mount for RT5200.

RT5300-SM
Shock mount for RT5300 modem.

RT7201MM
Mobile mount for RT7201F and RT7201I remote control heads.

UNIV-SM
Shock mount for RT7000.

UPS1000-SM
Shock mount for UPS1000.

UPS500-SM
Shock mount for UPS500.

Racks and Rack Mounts

RA1000-RM
Rack mount for RA1000.

RA400RM
Rack mount for RA400.

RACK7100-220-OD
Identical to the RACK7100-OD except designed for 230 VAC/50 Hz systems. Includes NEMA 6-20R receptacles in power strip and NEMA 6-15P. ac power plug on main power cable.

RACK7100-OD
19 in. (48 cm) W x 21 in. (53 cm) H, enclosed rack cabinet. Includes 115 VAC power strip. MIL OD color. For 115 VAC/60 Hz systems. Custom shock mounts are available.

RACK7500-220-OD
Identical to the RACK7500-OD except designed for 230 VAC/50 Hz systems. Includes NEMA 6-20R receptacles in power strip and NEMA 6-15P ac power plug on main power cable.

RACK7500-OD
19 in. (48 cm) W x 33 in. (84 cm) H, enclosed rack cabinet. Includes 115 VAC power strip. MIL OD color. For 115 VAC/60 Hz systems. Custom shock mounts are available.

RT7000RM
Rack mount for RT7000.

RT7000RMS
Rack mount (with slides). Rack mount complete with slides for extending transceiver to the front of the rack cabinet. (Optional rack cabinets available include RACK7100 and RACK7500.)

UPF7000RM
Rack mount for UPF7000.

UPS1000-RM
Rack mount for UPS500 or UPS1000.

UPS1000SWARM
Rack mount for UPS1000SWA.

UPS1000SWARMS
Rack mount for UPS1000SWA with slides.

Stack Mount Kits

RT-MT
Supplies mounting brackets for RT7000, RA400, RA1000, UPS500 and UPS1000.

Audio Accessories for the RT7000-Series

Note: Required for transceivers and remote controls.

DSP9000HS
Ruggedized, half-duplex audio ciphering handset. Normal operation is fully automatic; user simply selects Plain or Cipher mode.

H-140/U
Ruggedized headphones with 5-pin connector.

H-250/U
Non-repairable version of MHS.

Note: The H-250/U requires a U.S. Government export license.

H3M
Headset-boom microphone. Single earphone low profile; will fit under GI Kevlar helmet with clip-on push-to-talk switch.

HPR
Headphones with military-type connector.

HSR
Dual headset with boom microphone and military-type connector.

KYR
CW key with military-type connector.

MDR
Desk microphone with military-type connector.

MHS
U.S. military-style H-189/U-type handset with military-type connector.

MRR
Heavy-duty hand microphone with military-type connector.

System Configurations for the RT7000-Series

Many different system configurations are available using the RT7000 as the core. They are shown in the following pages with all system components and interconnecting cables. 125W, 400W, and 1 kW systems are summarized below. The RT7000-12 or the RT7000-28 can be used in any of the illustrated systems with the proper power supply.

RT7000 System Descriptions	Mobile (M) or Base (B) Station	RF Power Output	Whip (W) or Broadband (B)	Voice /Data	Remote Control
28 Vdc Mobile Voice System with Whip Antenna	M	125W	W	V	
28 Vdc Mobile Voice and Data System with Whip Antenna	M	125W	W	V/D	
28 Vdc Mobile Voice System with Whip Antenna and Extended Control	M	125W	W	V	Extended
28 Vdc Voice Base Station with Whip Antenna	B	125W	W	V	
28 Vdc Voice Base Station with Broadband Antenna	B	125W	B	V	
28 Vdc, Voice and Data Base Station with Whip Antenna	B	125W	W	V/D	
28 Vdc Voice and Data Base Station with Broadband Antenna	B	125W	B	V/D	
28 Vdc Voice Base Station with Whip Antenna and FSK Remote Control	B	125W	W	V	FSK
28 Vdc Voice Base Station with Broadband Antenna and FSK Remote Control	B	125W	B	V	FSK
28 Vdc Voice Base Station with Whip Antenna, and ISDN Remote Control	B	125W	W	V	ISDN
28 Vdc Voice Base Station with Broadband Antenna, and ISDN Remote Control	B	125W	B	V	ISDN
28 Vdc Voice and Data Base Station with Whip Antenna, and ISDN Remote Control	B	125W	W	V/D	ISDN
28 Vdc Voice and Data Base Station with Broadband Antenna, and ISDN Remote Control	B	125W	B	V/D	ISDN
28 Vdc, 400W, Mobile Voice System with Whip Antenna	M	400W	W	V	
28 Vdc, 400W, Mobile Voice and Data System with Whip Antenna	M	400W	W	V/D	
28 Vdc, 400W, Voice Base Station with Broadband Antenna	B	400W	B	V	
28 Vdc, 400W, Voice Base Station with Broadband Antenna	B	400W	B	V	
28 Vdc, 400W, Voice and Data Base Station with Whip Antenna	B	400W	W	V/D	

RT7000 System Descriptions	Mobile (M) or Base (B) Station	RF Power Output	Whip (W) or Broadband (B)	Voice /Data	Remote Control
28 Vdc, 400W, Voice and Data Base Station with Broadband Antenna	B	400W	B	V/D	
28 Vdc, 400W, Voice Base Station with Whip Antenna and FSK Remote Control	B	400W	W	V	FSK
28 Vdc, 400W, Voice Base Station with Broadband Antenna and FSK Remote Control	B	400W	B	V	FSK
28 Vdc, 400W, Voice Base Station with Whip Antenna, and ISDN Remote Control	B	400W	W	V	ISDN
28 Vdc 400W, Voice Base Station with Broadband Antenna, and ISDN Remote Control	B	400W	B	V	ISDN
28 Vdc, 400W, Voice and Data Base Station with Whip Antenna, and ISDN Remote Control	B	400W	W	V/D	ISDN
28 Vdc, 400W, Voice and Data Base Station with Broadband Antenna, and ISDN Remote Control	B	400W	B	V/D	ISDN
28 Vdc, 400W, Voice and Data Base Station with Broadband Antenna, and Power Factor Corrected Switch Mode Power Supply	B	400W	B	V/D	
28 Vdc, 1000W, Voice Base Station with Whip Antenna	B	1000W	W	V	
28 Vdc, 1000W, Voice Base Station with Broadband Antenna	B	1000W	B	V	
28 Vdc, 1000W, Voice and Data Base Station with Whip Antenna	B	1000W	W	V/D	
28 Vdc, 1000W, Voice and Data Base Station with Broadband Antenna	B	1000W	B	V/D	
28 Vdc, 1000W, Voice and Data Base Station with Whip Antenna and FSK Remote Control	B	1000W	W	V	FSK
28 Vdc, 1000W, Voice and Data Base Station with Broadband Antenna and FSK Remote Control	B	1000W	B	V	FSK

RM7000 AND RS7000
125W HF SYSTEMS

- 1.6 MHz-30 MHz (receive 100 kHz-30 MHz)
- Synthesized 10 Hz Steps
- Up to 1000 Memory Channels
- 125W PEP/Average Output
- Voice and Data System
- DSP-based Speech Processing
- Multi-Protocol Remote Control Capabilities
- Dual ALE Capability

RM7000

The RM7000-series of systems are 125W mobile configurations designed to be used with narrow-band (whip) antennas and automatic antenna tuners. They include vehicular mounting trays and brackets for all the equipment, and shock mounts for the larger, heavier pieces. They are configured to be powered from either a vehicle power source or an appropriate generator.

RS7000

The RS7000-series of systems are 125W configurations designed to be used in a fixed station with broadband antenna systems. They use separate power supplies which can be powered from generators or ac mains.

Both the RM7000 and the RS7000 systems can accommodate voice and data communications. A standard PC or laptop computer can be used with any of the data system configurations. For more information on data equipment in a system configuration, refer to the Data Communication Products section.

28 Vdc Mobile Voice System with Whip Antenna

Item	Quantity Supplied	DWC P/N	Item Description
1	1	RT7000-28	Transceiver, ruggedized, HF, 125W, 1.6-30 MHz, 28 Vdc (receive 100 kHz-30 MHz). Includes C991556.
2	1	RAT7000B	Antenna tuner, automatic, 150W. Includes C991620 antenna lead.
3	1	MAR-16	Antenna, whip, 5m (16 ft.) with vehicle mount kit.
4	1	UNIV-SM	Mounting kit, shock, RT7000-28.
5	1	MHS	Handset, military style H-189/U-type.
6	1	C991505	RT7000-28 to RAT7000B, RF cable.
7	1	C992142	RT7000-28 to RAT7000B, control cable.
12 Vdc Option (primary power source is +12 Vdc.)			
Add:	1	RT7000-12	Transceiver, ruggedized, HF, 125W, 1.6-30 MHz, 12 Vdc.
Delete:	1	RT7000-28	Transceiver, ruggedized, HF, 125W, 1.6-30 MHz, 28 Vdc.

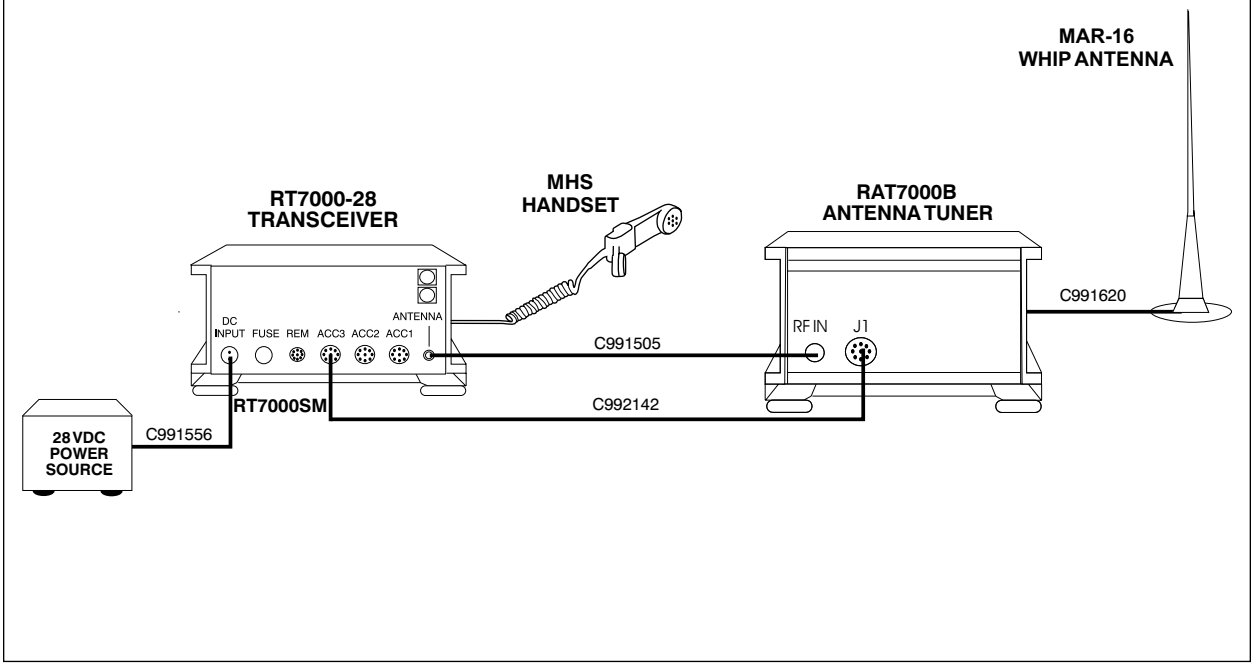

28 Vdc Mobile Voice and Data System with Whip Antenna

Item	Quantity Supplied	DWC P/N	Item Description
1	1	RT7000-28	Transceiver, ruggedized, HF, 125W, 1.6-30 MHz, 28 Vdc (receive 100 kHz-30 MHz). Includes C991556.
2	1	RAT7000B	Antenna tuner, automatic, 150W. Includes C991620 antenna lead.
3	1	MAR-16	Antenna, whip, 5m (16 ft.) with vehicle mount kit.
4	1	UNIV-SM	Mounting kit, shock, RT7000-28.
5	1	MHS	Handset, military style H-189/U-type.
6	1	C992142	RT7000-28 to RAT7000B, control cable.
ALE Option			
Add:	1	7000ALE	Internal FED-STD-1045A ALE module with controller software.
12 Vdc Option (primary power source is +12 Vdc.)			
Add:	1	RT7000-12	Transceiver, ruggedized, HF, 125W, 1.6-30 MHz, 12 Vdc.
Delete:	1	RT7000-28	Transceiver, ruggedized, HF, 125W, 1.6-30 MHz, 28 Vdc.

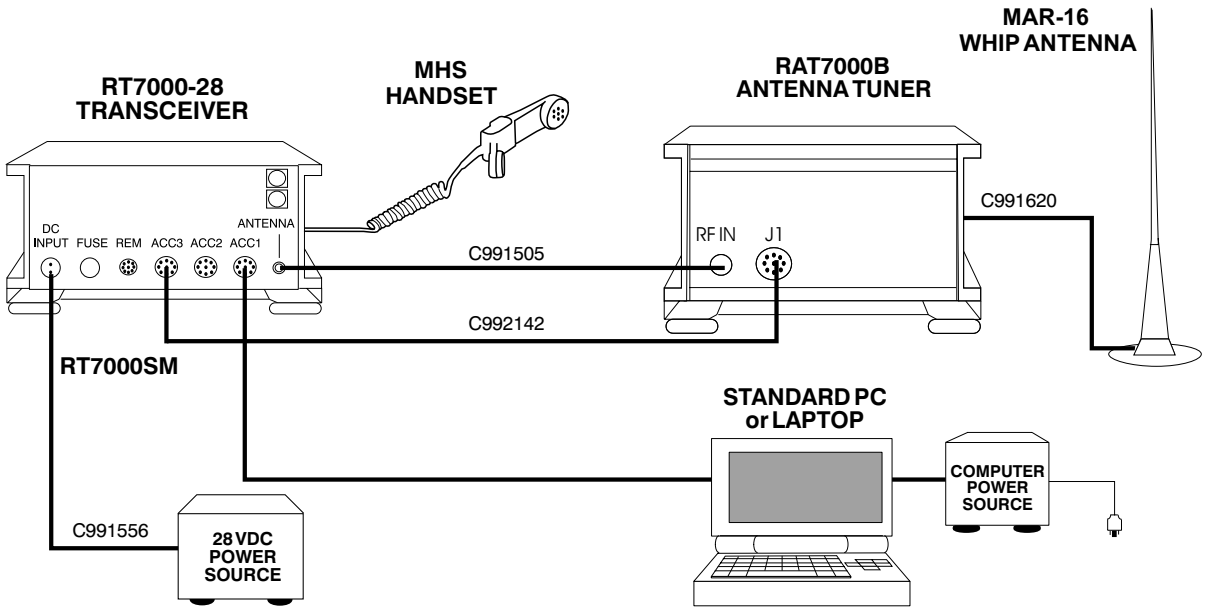

For data system configurations, refer to the Data Communication Products section.

28 Vdc Mobile Voice System with Whip Antenna and Extended Control

Item	Quantity Supplied	DWC P/N	Item Description
1	1	RT7000E-28	Transceiver, ruggedized, HF, 125W, 1.6-30 MHz, 28 Vdc (receive 100 kHz-30 MHz), extended control operation. Includes C991556.
2	1	RT7201E	Extended control console.
3	1	RAT7000B	Antenna tuner, automatic, 150W. Includes C991620 antenna lead.
4	1	MAR-16	Antenna, whip, 5m (16 ft.) with vehicle mount kit.
5	1	UNIV-SM	Mounting kit, shock, RT7000-28.
6	1	MHS	Handset, military style H-189/U-type.
7	1	C991505	RT7000-28 to RAT7000B, RF cable.
8	1	C991943	RT7000E-28 to RT7201E, control cable.
9	1	C992142	RT7000-28 to RAT7000B, control cable.
12 Vdc Option (primary power source is +12 Vdc.)			
Add:	1	RT7000E-12	Transceiver, ruggedized, HF, 125W, 1.6-30 MHz, 12 Vdc.
Delete:	1	RT7000E-28	Transceiver, ruggedized, HF, 125W, 1.6-30 MHz, 28 Vdc.

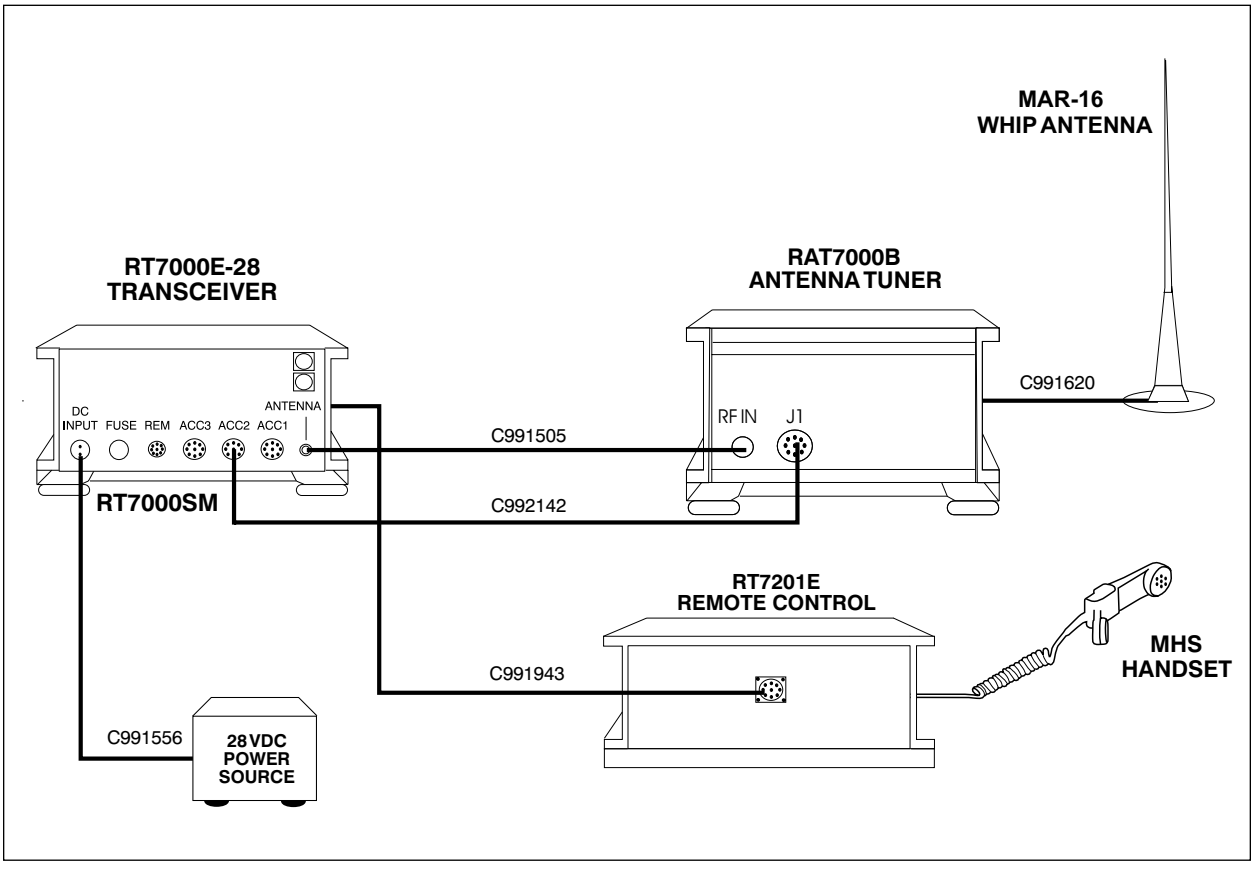

28 Vdc Voice Base Station with Whip Antenna

Item	Quantity Supplied	DWC P/N	Item Description
1	1	RT7000-28	Transceiver, ruggedized, HF, 125W, 1.6-30 MHz, 28 Vdc (receive 100 kHz-30 MHz).
2	1	UPF7000-28	Power supply, 115/230 VAC, 50-60 Hz input, 28 Vdc output.
3	1	RAT7000B	Antenna tuner, automatic, 150W. Includes C991620 antenna lead.
4	1	RA-PAS	Antenna, whip, 10m (32 ft.) with side feed base.
5	1	MHS	Handset, military style H-189/U-type.
6	1	C991505	RT7000-28 to RAT7000B, RF cable.
7	1	C991511	RT7000-28 to UPS7000-28, dc power cable.
8	1	C992142	RT7000-28 to RAT7000B, control cable.
12 Vdc Option (primary power source is +12 Vdc.)			
Add:	1	RT7000-12	Transceiver, ruggedized, HF, 125W, 1.6-30 MHz, 12 Vdc.
	1	UPF7000-12	Power supply, 115/230 VAC, 50-60 Hz input, 12 Vdc output.
Delete:	1	RT7000-28	Transceiver, ruggedized, HF, 125W, 1.6-30 MHz, 28 Vdc.
	1	UPF7000-28	Power supply, 115/230 VAC, 50-60 Hz input, 28 Vdc output.

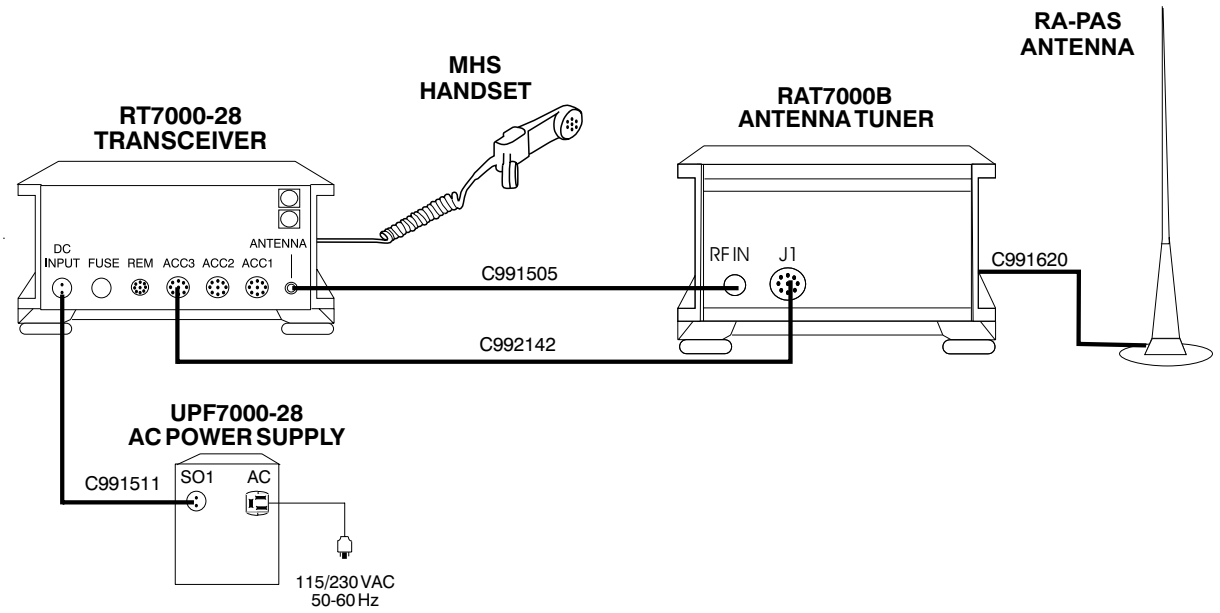

28 Vdc Voice Base Station with Broadband Antenna

Item	Quantity Supplied	DWC P/N	Item Description
1	1	RT7000-28	Transceiver, ruggedized, HF, 125W, 1.6-30 MHz, 28 Vdc (receive 100 kHz-30 MHz).
2	1	UPF7000-28	Power supply, 115/230 VAC, 50-60 Hz input, 28 Vdc output.
3	1	ABB100AN	Antenna, broadband, 2-30 MHz, 150W, with 30m coax.
4	1	MHS	Handset, military style H-189/U-type.
5	1	C991511	RT7000-28 to UPS7000-28, dc power cable.
Mast Option			
Add:	1	AMX	Portable antenna mast kit for ABB100AN.
12 Vdc Option (primary power source is +12 Vdc.)			
Add:	1	RT7000-12	Transceiver, ruggedized, HF, 125W, 1.6-30 MHz, 12 Vdc.
	1	UPF7000-12	Power supply, 115/230 VAC, 50-60 Hz input, 12 Vdc output.
Delete:	1	RT7000-28	Transceiver, ruggedized, HF, 125W, 1.6-30 MHz, 28 Vdc.
	1	UPF7000-28	Power supply, 115/230 VAC, 50-60 Hz input, 28 Vdc output.

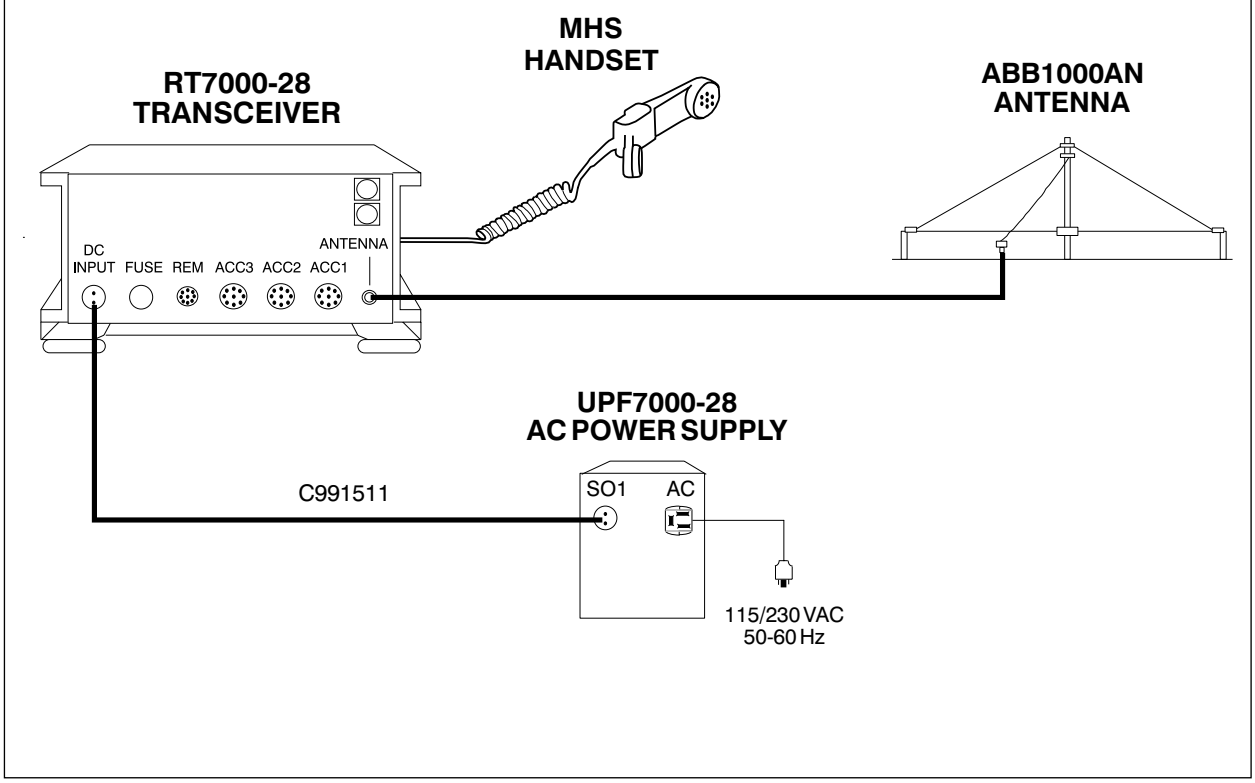

28 Vdc, Voice and Data Base Station with Whip Antenna

Item	Quantity Supplied	DWC P/N	Item Description
1	1	RT7000-28	Transceiver, ruggedized, HF, 125W, 1.6-30 MHz, 28 Vdc (receive 100 kHz-30 MHz).
2	1	UPF7000-28	Power supply, 115/230 VAC, 50-60 Hz input, 28 Vdc output.
3	1	RAT7000B	Antenna tuner, automatic, 150W. Includes C991620 antenna lead.
4	1	RA-PAS	Antenna, whip, 10m (32 ft.) with side feed base.
5	1	MHS	Handset, military style H-189/U-type.
6	1	C991505	RT7000-28 to RAT7000B, RF cable.
7	1	C991511	RT7000-28 to UPS7000-28, dc power cable.
8	1	C992142	RT7000-28 to RAT7000B, control cable.
ALE Option			
Add:	1	7000ALE	Internal FED-STD-1045A ALE module with controller software.
12 Vdc Option (primary power source is +12 Vdc.)			
Add:	1	RT7000-12	Transceiver, ruggedized, HF, 125W, 1.6-30 MHz, 12 Vdc.
	1	UPF7000-12	Power supply, 115/230 VAC, 50-60 Hz input, 12 Vdc output.
Delete:	1	RT7000-28	Transceiver, ruggedized, HF, 125W, 1.6-30 MHz, 28 Vdc.
	1	UPF7000-28	Power supply, 115/230 VAC, 50-60 Hz input, 28 Vdc output.

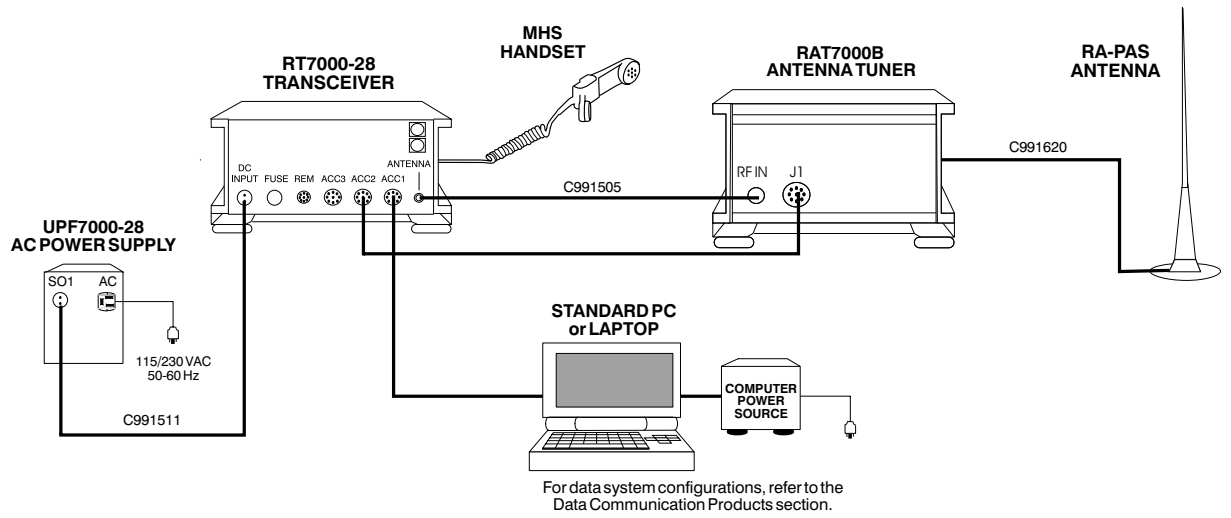

28 Vdc Voice and Data Base Station with Broadband Antenna

Item	Quantity Supplied	DWC P/N	Item Description
1	1	RT7000-28	Transceiver, ruggedized, HF, 125W, 1.6-30 MHz, 28 Vdc (receive 100 kHz-30 MHz).
2	1	UPF7000-28	Power supply, 115/230 VAC, 50-60 Hz input, 28 Vdc output.
3	1	ABB100AN	Antenna, broadband, 2-30 MHz, 150W, with 30m coax.
4	1	MHS	Handset, military style H-189/U-type.
5	1	C991511	RT7000-28 to UPS7000-28, dc power cable.
Mast Option			
Add:	1	AMX	Portable antenna mast kit for ABB100AN.
ALE Option			
Add:	1	7000ALE	Internal FED-STD-1045A ALE module with controller software.
12 Vdc Option (primary power source is +12 Vdc.)			
Add:	1	RT7000-12	Transceiver, ruggedized, HF, 125W, 1.6-30 MHz, 12 Vdc.
	1	UPF7000-12	Power supply, 115/230 VAC, 50-60 Hz input, 12 Vdc output.
Delete:	1	RT7000-28	Transceiver, ruggedized, HF, 125W, 1.6-30 MHz, 28 Vdc.
	1	UPF7000-28	Power supply, 115/230 VAC, 50-60 Hz input, 28 Vdc output.

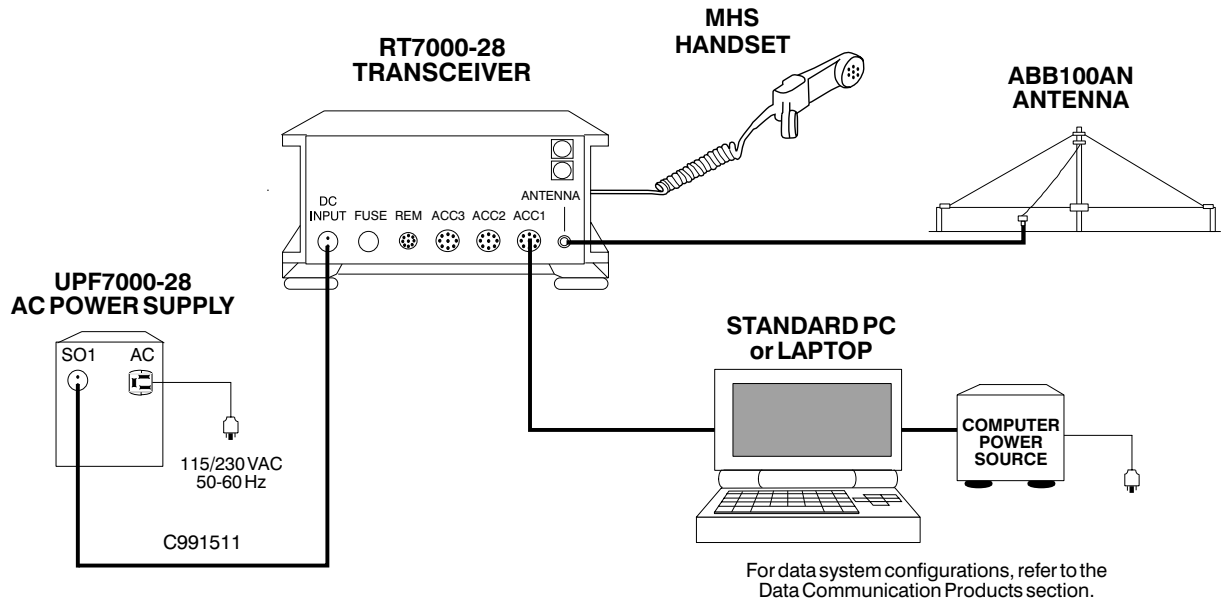

28 Vdc Voice Base Station with Whip Antenna and FSK Remote Control

Item	Quantity Supplied	DWC P/N	Item Description
1	1	RT7000-28	Transceiver, ruggedized, HF, 125W, 1.6-30 MHz, 28 Vdc (receive 100 kHz-30 MHz).
2	1	RT7201F	Remote control console (FSK). Includes C992042.
3	1	7000RF	FSK remote control PC assembly for RT7000-28.
4	1	UPF7000-28	Power supply, 115/230 VAC, 50-60 Hz input, 28 Vdc output.
5	1	RAT7000B	Antenna tuner, automatic, 150W. Includes C991620 antenna lead.
6	1	RA-PAS	Antenna, whip, 10m (32 ft.) with side feed base.
7	2	MHS	Handset, military style H-189/U-type.
8	1	C991505	RT7000-28 to RAT7000B, RF cable.
9	1	C991511	RT7000-28 to UPS7000-28, dc power cable.
10	1	C992142	RT7000-28 to RAT7000B, control cable.
11	1	C992306	RT7000-28 to RT7201F, control cable. If unterminated cables are required, order C992308 (specify length).
Remote Only Option (system control only from RT7201F)			
Add:	1	RT7000RF-28	Transceiver, ruggedized, HF, 125W, for remote use.
Delete:	1	RT7000-28	Transceiver, ruggedized, HF, 125W, 1.6-30 MHz, 28 Vdc.
	1	7000RF	FSK remote control PC assembly for RT7000-28.
	1	MHS	Handset, military style H-189/U-type.
12 Vdc Option (primary power source is +12 Vdc.)			
Add:	1	RT7000-12	Transceiver, ruggedized, HF, 125W, 1.6-30 MHz, 12 Vdc.
	1	UPF7000-12	Power supply, 115/230 VAC, 50-60 Hz input, 12 Vdc output.
Delete:	1	RT7000-28	Transceiver, ruggedized, HF, 125W, 1.6-30 MHz, 28 Vdc.
	1	UPF7000-28	Power supply, 115/230 VAC, 50-60 Hz input, 28 Vdc output.

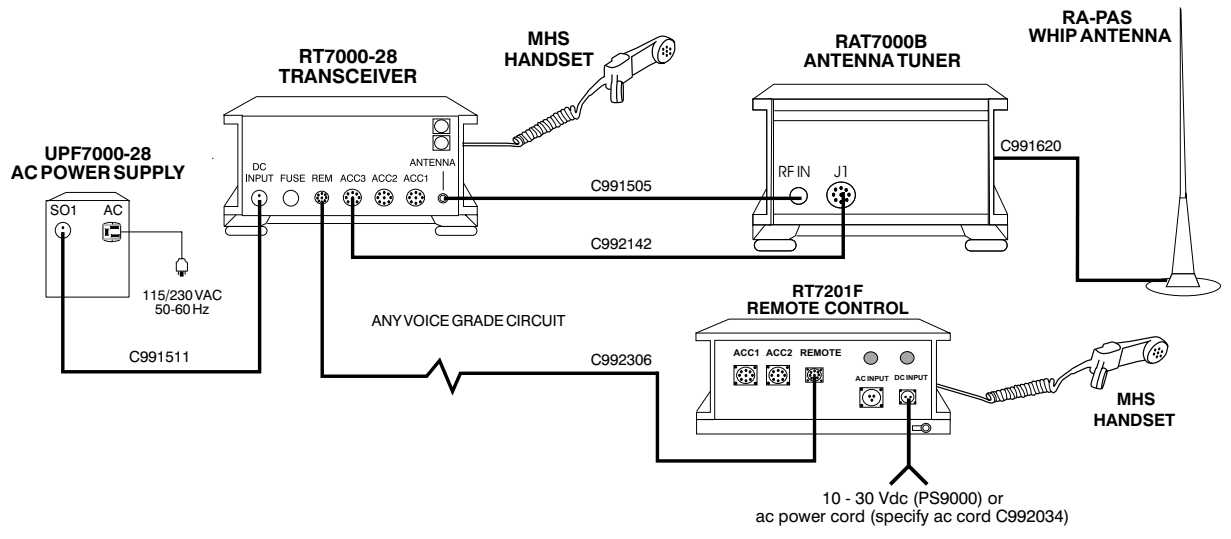

28 Vdc Voice Base Station with Broadband Antenna and FSK Remote Control

Item	Quantity Supplied	DWC P/N	Item Description
1	1	RT7000-28	Transceiver, ruggedized, HF, 125W, 1.6-30 MHz, 28 Vdc (receive 100 kHz-30 MHz).
2	1	RT7201F	Remote control console (FSK). Includes C992042.
3	1	7000RF	FSK remote control PC assembly for RT7000-28.
4	1	UPF7000-28	Power supply, 115/230 VAC, 50-60 Hz input, 28 Vdc output.
5	1	ABB100AN	Antenna, broadband, 2-30 MHz, 150W, with 30m coax.
6	2	MHS	Handset, military style H-189/U-type.
7	1	C991511	RT7000-28 to UPS7000-28, dc power cable.
8	1	C992306	RT7000-28 to RT7201F, control cable. If unterminated cables are required, order C992308 (specify length).
Mast Option			
Add:	1	AMX	Portable antenna mast kit for ABB100AN.
Remote Only Option (system control only from RT7201F)			
Add:	1	RT7000RF-28	Transceiver, ruggedized, HF, 125W, for remote use.
Delete:	1	RT7000-28	Transceiver, ruggedized, HF, 125W, 1.6-30 MHz, 28 Vdc.
	1	7000RF	FSK remote control PC assembly for RT7000-28.
	1	MHS	Handset, military style H-189/U-type.
12 Vdc Option (primary power source is +12 Vdc)			
Add:	1	RT7000-12	Transceiver, ruggedized, HF, 125W, 1.6-30 MHz, 12 Vdc.
	1	UPF7000-12	Power supply, 115/230 VAC, 50-60 Hz input, 12 Vdc output.
Delete:	1	RT7000-28	Transceiver, ruggedized, HF, 125W, 1.6-30 MHz, 28 Vdc.
	1	UPF7000-28	Power supply, 115/230 VAC, 50-60 Hz input, 28 Vdc output.

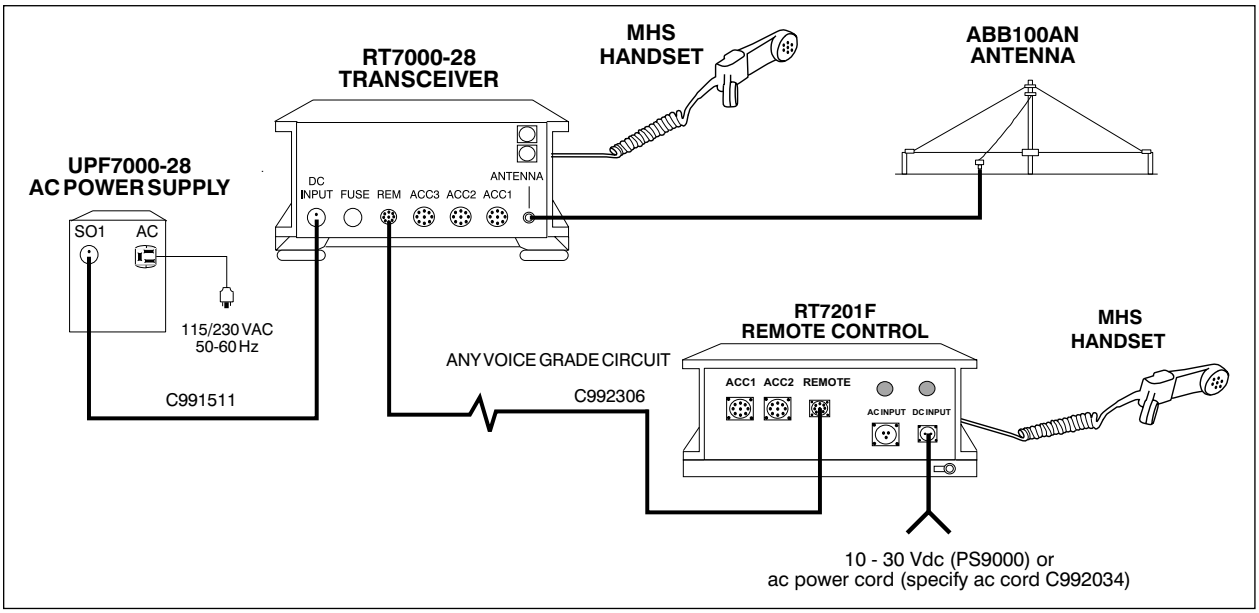

28 Vdc Voice Base Station with Whip Antenna, and ISDN Remote Control

Item	Quantity Supplied	DWC P/N	Item Description
1	1	RT7000-28	Transceiver, ruggedized, HF, 125W, 1.6-30 MHz, 28 Vdc (receive 100 kHz-30 MHz).
2	1	RT7201I	Remote control console (ISDN). Includes C992042.
3	1	7000RI	PC assembly (ISDN) modem for RT7000-28.
4	1	UPF7000-28	Power supply, 115/230 VAC, 50-60 Hz input, 28 Vdc output.
5	1	RAT7000B	Antenna tuner, automatic, 150W. Includes C991620 antenna lead.
6	1	RA-PAS	Antenna, whip, 10m (32 ft.) with side feed base.
7	2	MHS	Handset, military style H-189/U-type.
8	1	C991505	RT7000-28 to RAT7000B, RF cable.
9	1	C991511	RT7000-28 to UPS7000-28, dc power cable.
10	1	C992142	RT7000-28 to RAT7000B, control cable.
11	1	C992306	RT7000-28 to RT7201I, control cable. If unterminated cables are required, order C992308 (specify length).
Remote Only Option (system control only from RT7201I)			
Add:	1	RT7000RI-28	Transceiver, ruggedized, HF, 125W, for remote use.
Delete:	1	RT7000-28	Transceiver, ruggedized, HF, 125W, 1.6-30 MHz, 28 Vdc.
	1	7000RI	PC assembly (ISDN) modem for RT7000-28.
	1	MHS	Handset, military style H-189/U-type.
12 Vdc Option (primary power source is +12 Vdc)			
Add:	1	RT7000-12	Transceiver, ruggedized, HF, 125W, 1.6-30 MHz, 12 Vdc.
	1	UPF7000-12	Power supply, 115/230 VAC, 50-60 Hz input, 12 Vdc output.
Delete:	1	RT7000-28	Transceiver, ruggedized, HF, 125W, 1.6-30 MHz, 28 Vdc.
	1	UPF7000-28	Power supply, 115/230 VAC, 50-60 Hz input, 28 Vdc output.

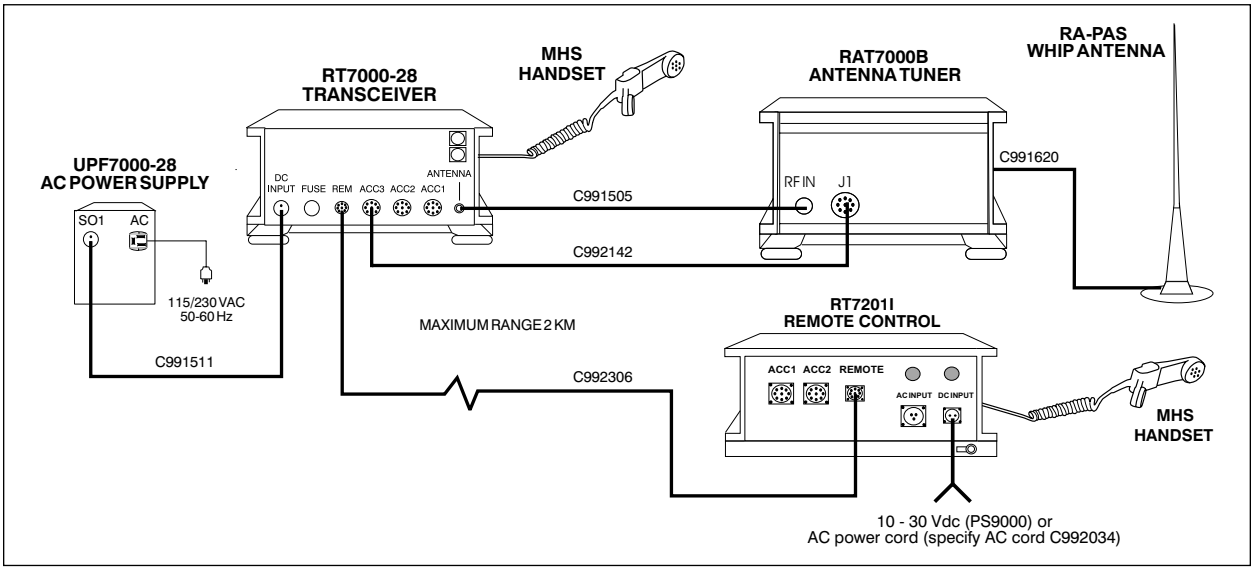

28 Vdc Voice Base Station with Broadband Antenna, and ISDN Remote Control

Item	Quantity Supplied	DWC P/N	Item Description
1	1	RT7000-28	Transceiver, ruggedized, HF, 125W, 1.6-30 MHz, 28 Vdc (receive 100 kHz-30 MHz).
2	1	RT7201I	Remote control console (ISDN). Includes C992042.
3	1	7000RI	PC assembly (ISDN) modem for RT7000-28.
4	1	UPF7000-28	Power supply, 115/230 VAC, 50-60 Hz input, 28 Vdc output.
5	1	ABB100AN	Antenna, broadband, 2-30 MHz, 150W, with 30m coax.
6	2	MHS	Handset, military style H-189/U-type.
7	1	C991511	RT7000-28 to UPS7000-28, dc power cable.
8	1	C992306	RT7000-28 to RT7201I, control cable. If unterminated cables are required, order C992308 (specify length).
Mast Option			
Add:	1	AMX	Portable antenna mast kit for ABB100AN.
Remote Only Option (system control only from RT7201I)			
Add:	1	RT7000RI-28	Transceiver, ruggedized, HF, 125W, for remote use.
Delete:	1	RT7000-28	Transceiver, ruggedized, HF, 125W, 1.6-30 MHz, 28 Vdc.
	1	7000RI	PC assembly (ISDN) modem for RT7000-28.
	1	MHS	Handset, military style H-189/U-type.
12 Vdc Option (primary power source is +12 Vdc)			
Add:	1	RT7000-12	Transceiver, ruggedized, HF, 125W, 1.6-30 MHz, 12 Vdc.
	1	UPF7000-12	Power supply, 115/230 VAC, 50-60 Hz input, 12 Vdc output.
Delete:	1	RT7000-28	Transceiver, ruggedized, HF, 125W, 1.6-30 MHz, 28 Vdc.
	1	UPF7000-28	Power supply, 115/230 VAC, 50-60 Hz input, 28 Vdc output.

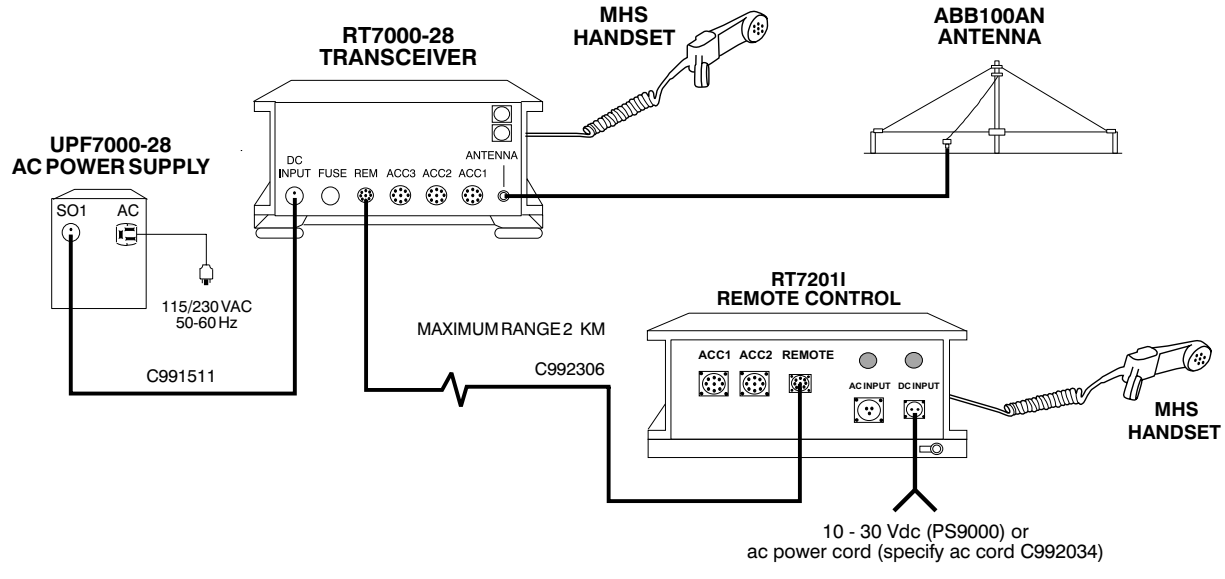

28 Vdc Voice and Data Base Station with Whip Antenna, and ISDN Remote Control

Item	Quantity Supplied	DWC P/N	Item Description
1	1	RT7000-28	Transceiver, ruggedized, HF, 125W, 1.6-30 MHz, 28 Vdc (receive 100 kHz-30 MHz).
2	1	RT7201I	Remote control console (ISDN). Includes C992042.
3	1	7000RI	PC assembly (ISDN) modem for RT7000-28.
4	1	UPF7000-28	Power supply, 115/230 VAC, 50-60 Hz input, 28 Vdc output.
5	1	RAT7000B	Antenna tuner, automatic, 150W. Includes C991620 antenna lead.
6	1	RA-PAS	Antenna, whip, 10m (32 ft.) with side feed base.
7	2	MHS	Handset, military style H-189/U-type.
8	1	C991505	RT7000-28 to RAT7000B, RF cable.
9	1	C991511	RT7000-28 to UPS7000-28, dc power cable.
10	1	C992142	RT7000-28 to RAT7000B control cable.
11	1	C992306	RT7000-28 to RT7201I, control cable. If unterminated cables are required, order C992308 (specify length).
ALE Option			
Add:	1	7000ALE	Internal FED-STD-1045A ALE module with controller software.
Remote Only Option (system control only from RT7201I)			
Add:	1	RT7000RI-28	Transceiver, ruggedized, HF, 125W, for remote use.
Delete:	1	RT7000-28	Transceiver, ruggedized, HF, 125W, 1.6-30 MHz, for remote use.
	1	7000RI	PC assembly (ISDN) modem for RT7000-28.
	1	MHS	Handset, military style H-189/U-type.
12 Vdc Option (primary power source is +12 Vdc.)			
Add:	1	RT7000-12	Transceiver, ruggedized, HF, 125W, 1.6-30 MHz, 12 Vdc.
	1	UPF7000-12	Power supply, 115/230 VAC, 50-60 Hz input, 12 Vdc output.
Delete:	1	RT7000-28	Transceiver, ruggedized, HF, 125W, 1.6-30 MHz, 28 Vdc.
	1	UPF7000-28	Power supply, 115/230 VAC, 50-60 Hz input, 28 Vdc output.

System diagram shown on the following page.

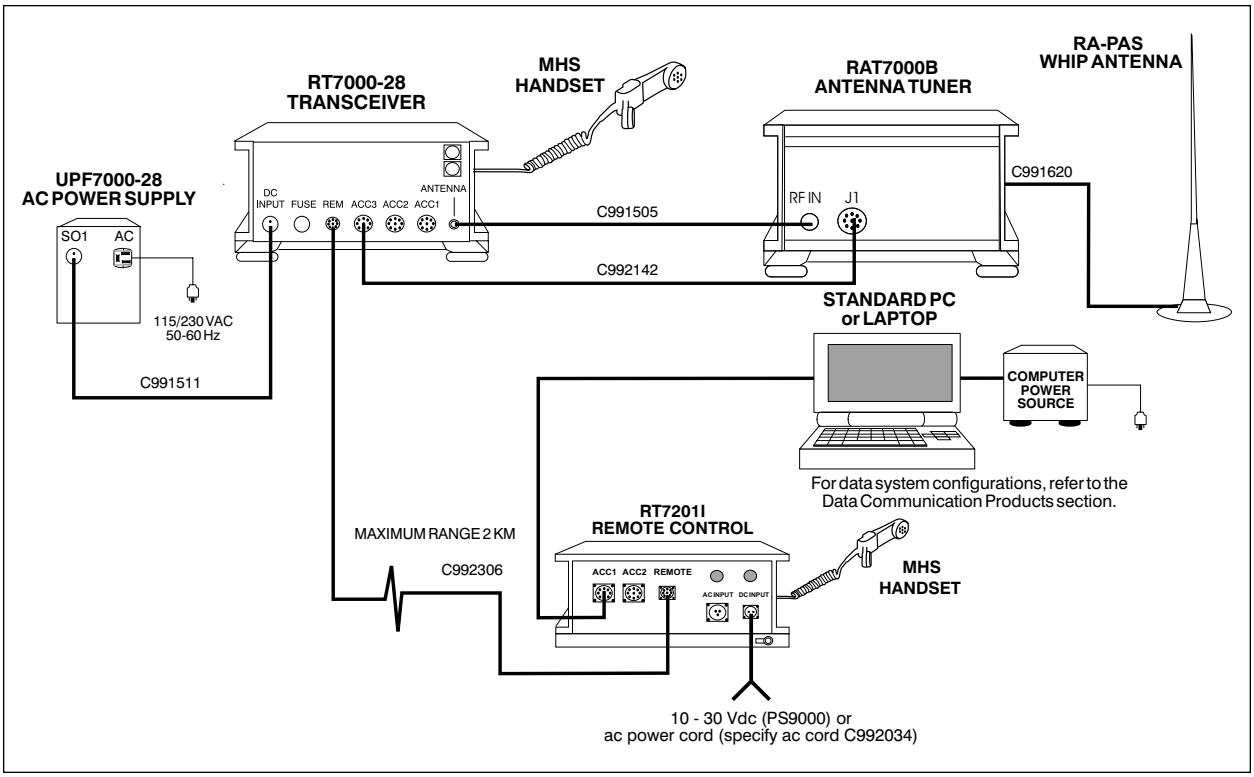
RT7000-28
TRANSCEIVER
MHS
HANDSET
RAT7000B
ANTENNA TUNER
RA-PAS
WHIP ANTENNA
UPF7000-28
AC POWER SUPPLY
DC
INPUT
FUSE
REM
ACC3
ACC2
ACC1
ANTENNA
RF IN
J1
C991620
C991505
C992142
SO1
AC
115/230 VAC
50-60 Hz
C991511
STANDARD PC
or LAPTOP
COMPUTER
POWER
SOURCE
For data system configurations, refer to the
Data Communication Products section.
RT7201I
REMOTE CONTROL
MAXIMUM RANGE 2 KM
C992306
ACC1
ACC2
REMOTE
AC INPUT
DC INPUT
MHS
HANDSET
10 - 30 Vdc (PS9000) or
ac power cord (specify ac cord C992034)

28 Vdc Voice and Data Base Station with Broadband Antenna, and ISDN Remote Control

Item	Quantity Supplied	DWC P/N	Item Description
1	1	RT7000-28	Transceiver, ruggedized, HF, 125W, 1.6-30 MHz, 28 Vdc (receive 100 kHz-30 MHz).
2	1	RT7201I	Remote control console (ISDN). Includes C992042.
3	1	7000RI	PC assembly (ISDN) modem for RT7000-28.
4	1	UPF7000-28	Power supply, 115/230 VAC, 50-60 Hz input, 28 Vdc output.
5	1	ABB100AN	Antenna, broadband, 2-30 MHz, 150W, with 30m coax.
6	2	MHS	Handset, military style H-189/U-type.
7	1	C991511	RT7000-28 to UPS7000-28, dc power cable.
8	1	C992306	RT7000-28 to RT7201I, control cable. If unterminated cables are required, order C992308 (specify length).
ALE Option			
Add:	1	7000ALE	Internal FED-STD-1045A ALE module with controller software.
Mast Option			
Add:	1	AMX	Portable antenna mast kit for ABB100AN.
Remote Only Option (system control only from RT7201I)			
Add:	1	RT7000RI-28	Transceiver, ruggedized, HF, 125W, for remote use.
Delete:	1	RT7000-28	Transceiver, ruggedized, HF, 125W, 1.6-30 MHz, for remote use.
	1	7000RI	PC assembly (ISDN) modem for RT7000-28.
	1	MHS	Handset, military style H-189/U-type.
12 Vdc Option (primary power source is +12 Vdc.)			
Add:	1	RT7000-12	Transceiver, ruggedized, HF, 125W, 1.6-30 MHz, 12 Vdc.
	1	UPF7000-12	Power supply, 115/230 VAC, 50-60 Hz input, 12 Vdc output.
Delete:	1	RT7000-28	Transceiver, ruggedized, HF, 125W, 1.6-30 MHz, 28 Vdc.
	1	UPF7000-28	Power supply, 115/230 VAC, 50-60 Hz input, 28 Vdc output.

System diagram shown on the following page.

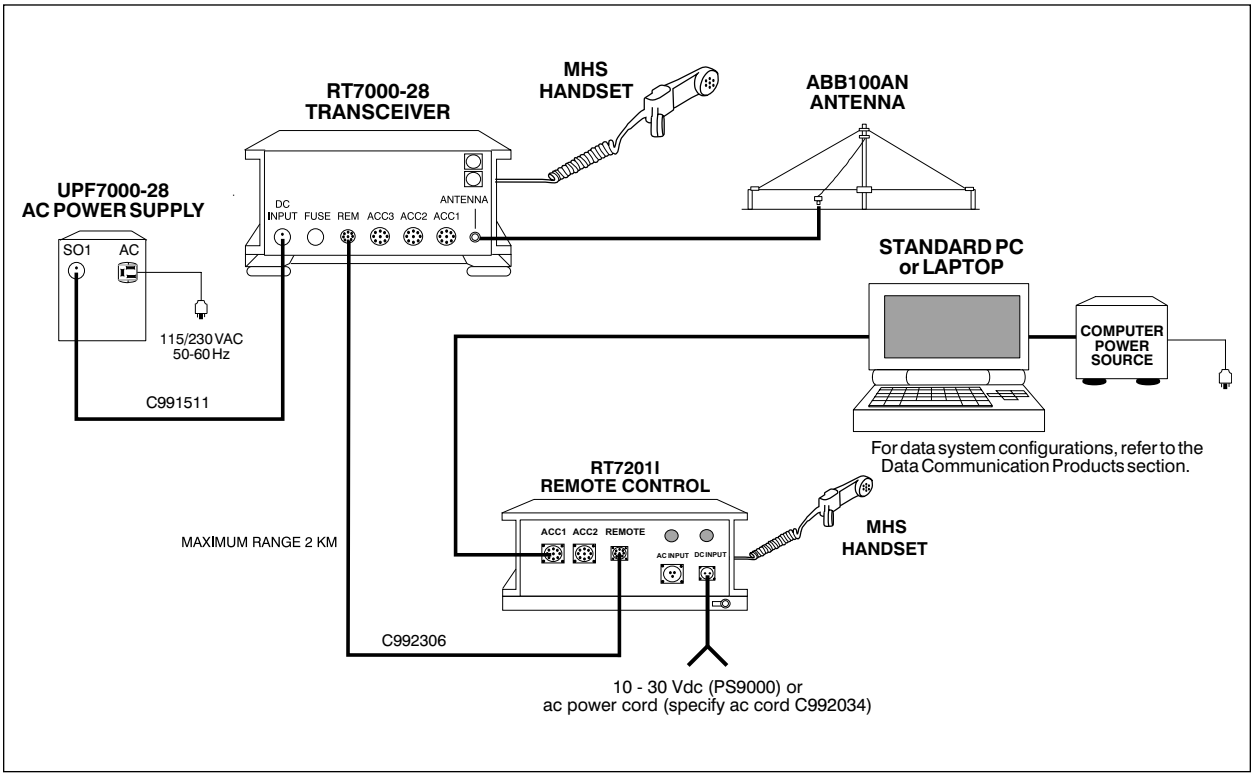
MHS
HANDSET
RT7000-28
TRANSCEIVER
ABB100AN
ANTENNA
UPF7000-28
AC POWER SUPPLY
DC
INPUT
FUSE
REM
ACC3
ACC2
ACC1
ANTENNA
SO1
AC
115/230 VAC
50-60 Hz
C991511
STANDARD PC
or LAPTOP
COMPUTER
POWER
SOURCE
For data system configurations, refer to the
Data Communication Products section.
RT7201I
REMOTE CONTROL
ACC1
ACC2
REMOTE
AC INPUT
DC INPUT
MHS
HANDSET
MAXIMUM RANGE 2 KM
C992306
10 - 30 Vdc (PS9000) or
ac power cord (specify ac cord C992034)

RM7100 AND RS7100
400W HF SYSTEMS

- 1.6 MHz-30 MHz (receive 100 kHz-30 MHz)
- Synthesized 10 Hz Steps
- Up to 1000 Memory Channels
- 400W PEP/Average Output
- Voice and Data System
- DSP-Based Speech Processing
- Multi-Protocol Remote Control Capabilities
- Dual ALE Capability

RM7100

The core RM7100 system is a complete 400W mobile station that is shock-mounted and consists of a transceiver, 400W amplifier, power supply, and whip antenna system (narrow-band antenna and appropriate tuner). These systems include vehicular mounting trays and brackets for all the equipment, and shock mounts for the larger, heavier pieces. They are designed to be powered from either a vehicle battery or an appropriate generator.

RS7100

The core RS7100 system is a complete 400W base station that is stack-mounted and consists of a transceiver, 400W amplifier, power supply, and appropriate antenna system. By adding the suitable accessory equipment, Datron is able to offer a broad range of high-power voice and data systems for either local or remote control applications. These systems use separate power supplies which can be powered from generator or the ac mains. Either narrow-band (whip) antennas or broadband antennas can be accommodated, however, systems using narrow-band antennas require a 1000W automatic antenna tuner (RAT1000).

The configurations shown in this section are core systems and can be enhanced and/or modified for numerous applications. Datron's trained Systems Engineering Group will be glad to assist users in configuring a custom 400W system suited to their specific needs. All necessary equipment will be seamlessly integrated into the system as required to satisfy the desired functionality. For more information, contact your Datron Representative.

28 Vdc, 400W, Mobile Voice System with Whip Antenna

Item	Quantity Supplied	DWC P/N	Item Description
1	1	RT7000-28	Transceiver, ruggedized, HF, 125W, 1.6-30 MHz, 28 Vdc (receive 100 kHz-30 MHz).
2	1	RA400	Amplifier, linear, RF power, 400W.
3	1	RAT1000	Antenna tuner, automatic digital, 1000W. Includes C991620 antenna lead.
4	1	MAR-16	Antenna, whip, 5m (16 ft.) with vehicle mount kit.
5	1	UNIV-SM	Shock mount, RT7000-28.
6	1	RA400-SM	Shock mount, RA400.
7	1	RAT1000-SM	Shock mount, RAT1000.
8	1	RT-MT	Mounting brackets.
9	2	MHS	Handset, military style H-189/U-type.
10	1	C991505	RA400 to RAT1000, RF cable.
11	1	C991510	RT7000-28 to RA400, RF cable.
12	1	C991511	RT7000-28 to RA400, dc power cable.
13	1	C991558	RA400 dc power cable.
14	1	C991925	RT7000-28 to RA400, control cable.
15	1	C991933	RT7000-28 to RAT1000, control cable.

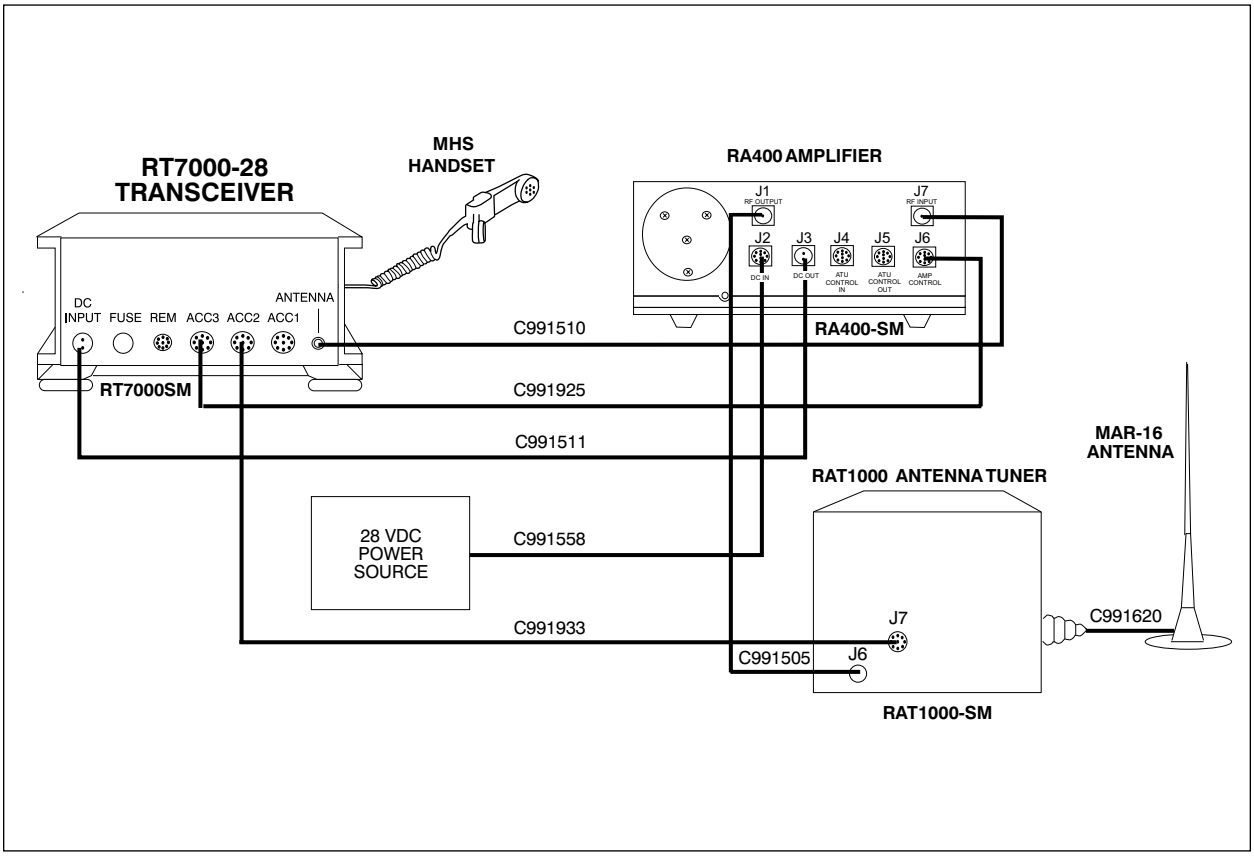

28 Vdc, 400W, Mobile Voice and Data System with Whip Antenna

Item	Quantity Supplied	DWC P/N	Item Description
1	1	RT7000-28	Transceiver, ruggedized, HF, 125W, 1.6-30 MHz, 28 Vdc (receive 100 kHz-30 MHz).
2	1	RA400	Amplifier, linear, RF power, 400W.
3	1	RAT1000	Antenna tuner, automatic digital, 1000W. Includes C991620 antenna lead.
4	1	RA-MAS	Antenna, whip, 5m (16 ft.) with vehicle mount kit.
5	1	UNIV-SM	Shock mount, RT7000-28.
6	1	RA400-SM	Shock mount, RA400.
7	1	RAT1000-SM	Shock mount, RAT1000.
8	2	RT-MT	Mounting brackets.
9	1	MHS	Handset, military style H-189/U-type.
10	1	C991505	RA400 to RAT1000, RF cable.
11	1	C991510	RT7000-28 to RA400, RF cable.
12	1	C991511	RT7000-28 to RA400, dc power cable.
13	1	C991558	RA400 dc power cable.
14	1	C991925	RT7000-28 to RA400, control cable.
15	1	C991933	RT7000-28 to RAT1000, control cable.
ALE Option			
Add:	1	7000ALE	Internal FED-STD-1045A ALE module with controller software.

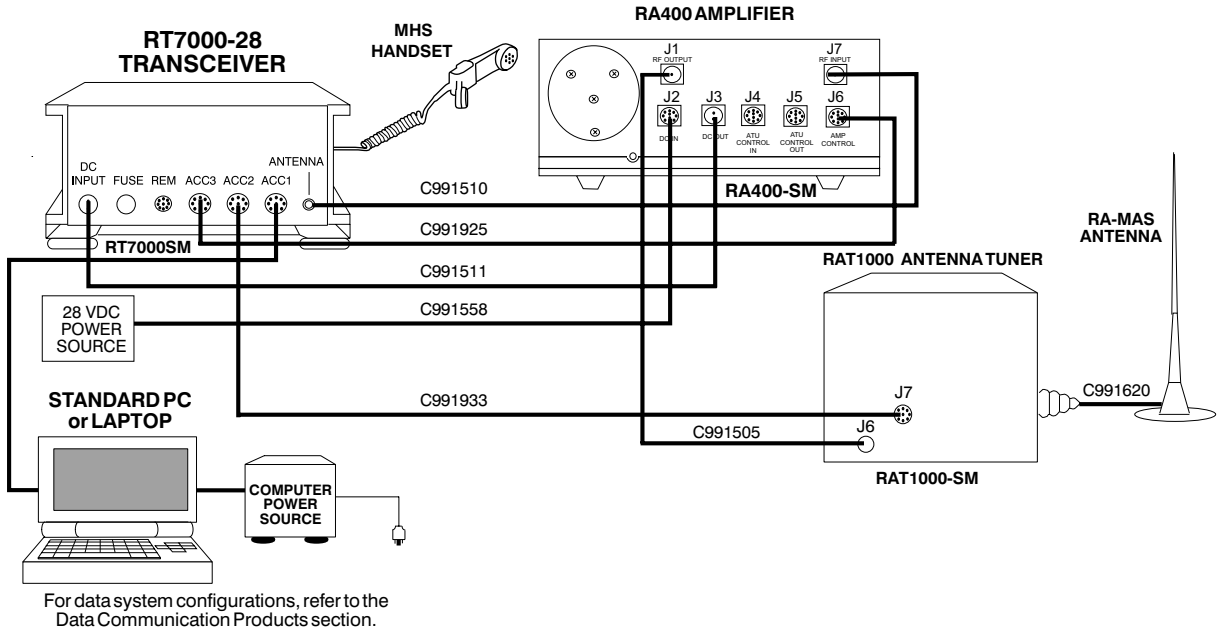

28 Vdc, 400W, Voice Base Station with Whip Antenna

Item	Quantity Supplied	DWC P/N	Item Description
1	1	RT7000-28	Transceiver, ruggedized, HF, 125W, 1.6-30 MHz, 28 Vdc (receive 100 kHz-30 MHz).
2	1	RA400	Amplifier, linear, RF power, 400W.
3	1	UPS500	Power supply, 115/230 VAC, 50-60 Hz input, 28 Vdc output.
4	1	RAT1000	Antenna tuner, automatic digital, 1000W. Includes C991620 antenna lead.
5	1	RA-PAS	Antenna, whip, 10m (32 ft.) with side feed base.
6	2	RT-MT	Mounting brackets.
7	1	MHS	Handset, military style H-189/U-type.
8	1	C991505	RA400 to RAT1000, RF cable.
9	1	C991510	RT7000-28 to RA400, RF cable.
10	1	C991511	RT7000-28 to RA400, dc power cable.
11	1	C991557	UPS500 to RA400, dc power cable.
12	1	C991925	RT7000-28 to RA400, control cable.
13	1	C991933	RT7000-28 to RAT1000, control cable.

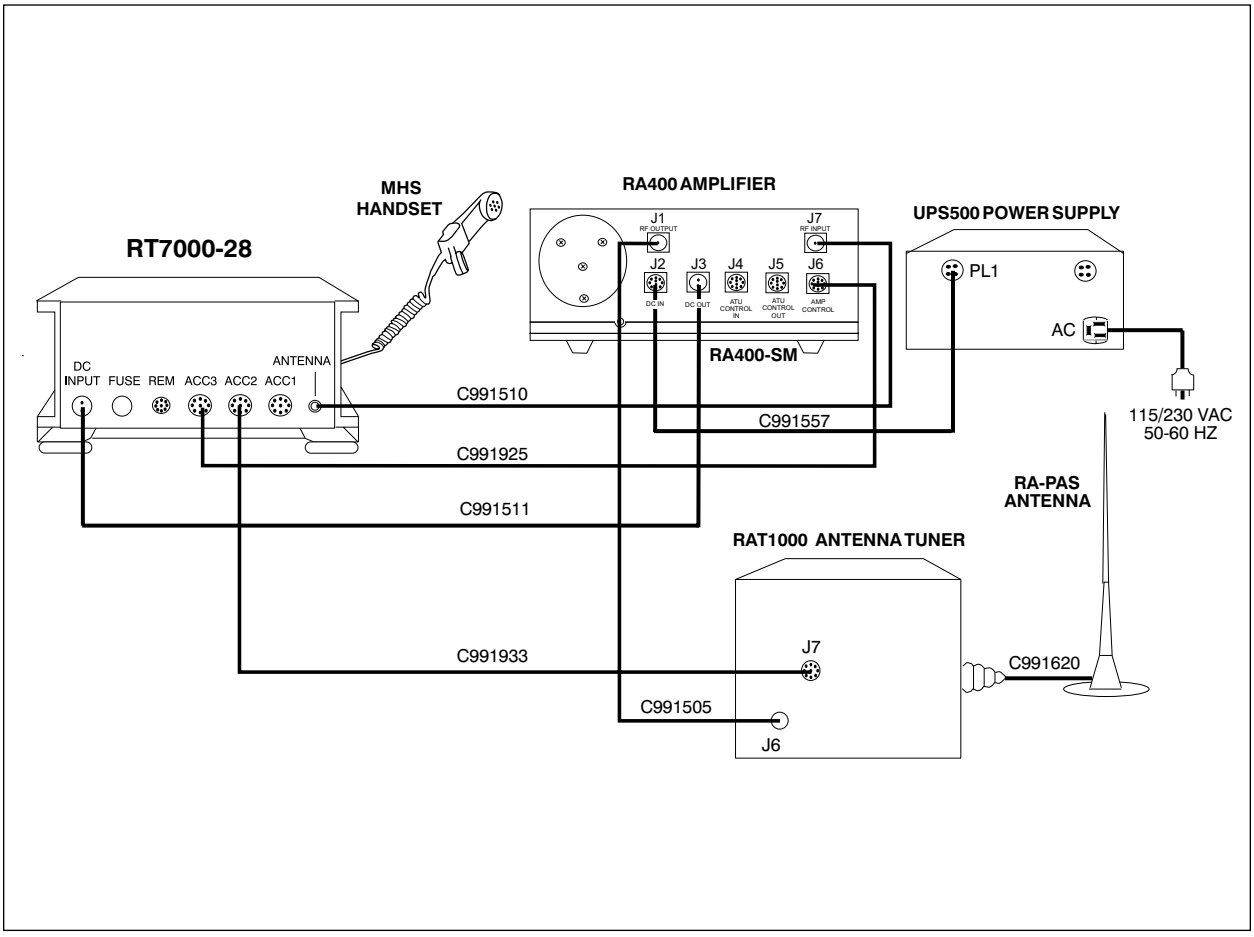

28 Vdc, 400W, Voice Base Station with Broadband Antenna

Item	Quantity Supplied	DWC P/N	Item Description
1	1	RT7000-28	Transceiver, ruggedized, HF, 125W, 1.6-30 MHz, 28 Vdc (receive 100 kHz-30 MHz).
2	1	RA400	Amplifier, linear, RF power, 400W.
3	1	UPS500	Power supply, 115/230 VAC, 50-60 Hz input, 28 Vdc output.
4	1	ABB1000AN	Antenna, broadband, 2-30 MHz, 1000W, with 30m coax.
5	1	RT-MT	Mounting brackets.
6	2	MHS	Handset, military style H-189/U-type.
7	1	C991510	RT7000-28 to RA400, RF cable.
8	1	C991511	RT7000-28 to RA400, dc power cable.
9	1	C991557	UPS500 to RA400, dc power cable.
10	1	C991925	RT7000-28 to RA400, control cable.
Mast Option			
Add:	1	AMX	Portable antenna mast kit for ABB1000AN.

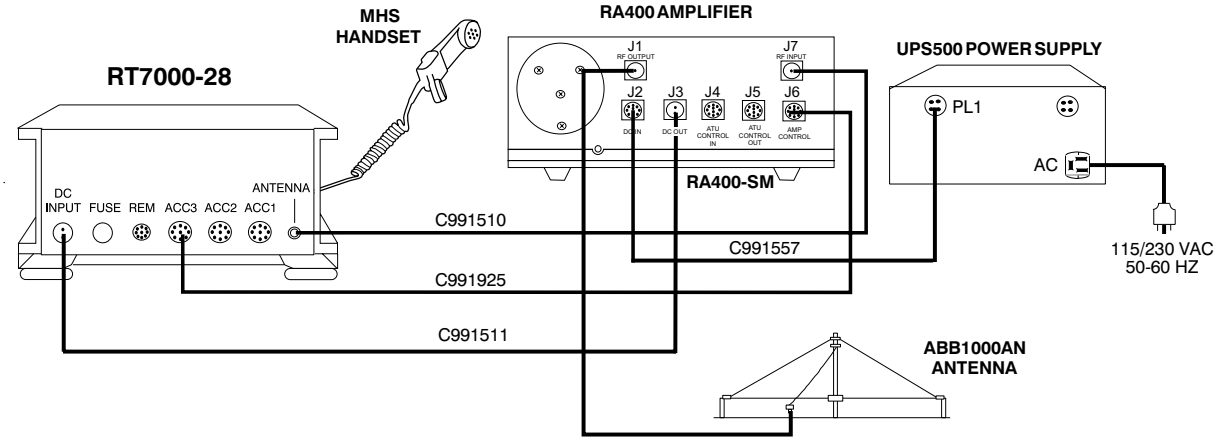

28 Vdc, 400W, Voice and Data Base Station with Whip Antenna

Item	Quantity Supplied	DWC P/N	Item Description
1	1	RT7000-28	Transceiver, ruggedized, HF, 125W, 1.6-30 MHz, 28 Vdc (receive 100 kHz-30 MHz).
2	1	RA400	Amplifier, linear, RF power, 400W.
3	1	UPS500	Power supply, 115/230 VAC, 50-60 Hz input, 28 Vdc output.
4	1	RAT1000	Antenna tuner, automatic digital, 1000W. Includes C991620 antenna lead.
5	1	RA-PAS	Antenna, whip, 10m (32 ft.) with side feed base.
6	2	RT-MT	Mounting brackets.
7	1	MHS	Handset, military style H-189/U-type.
8	1	C991505	RA400 to RAT1000, RF cable.
9	1	C991510	RT7000-28 to RA400, RF cable.
10	1	C991511	RT7000-28 to RA400, dc power cable.
11	1	C991557	UPS500 to RA400, dc power cable.
12	1	C991925	RT7000-28 to RA400, control cable.
13	1	C991933	RT7000-28 to RAT1000, control cable.
ALE Option			
Add:	1	7000ALE	Internal FED-STD-1045A ALE module with controller software.

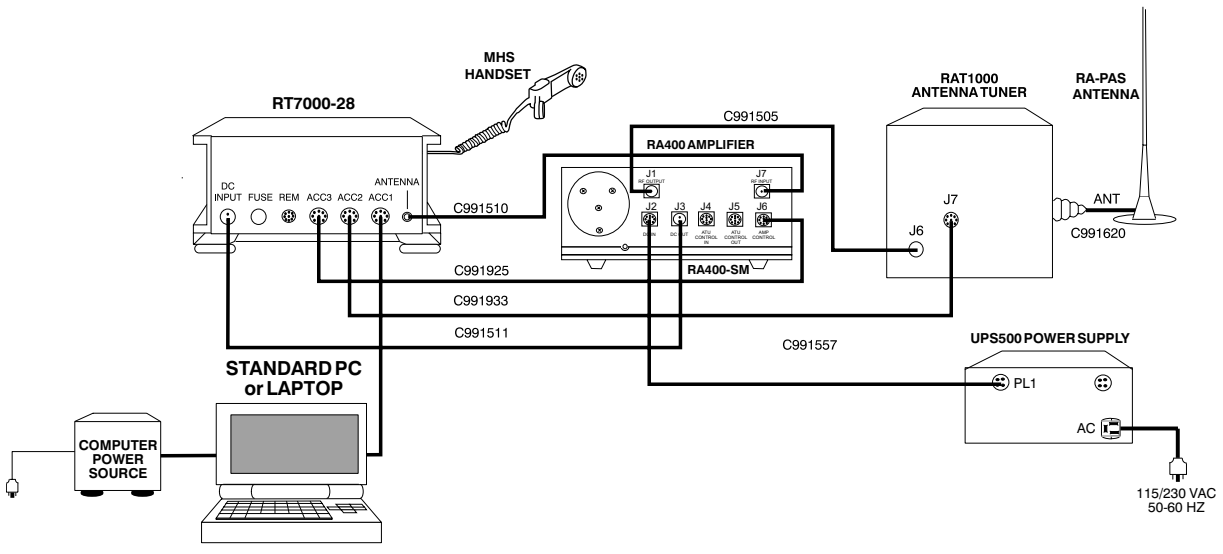

For data system configurations, refer to the Data Communication Products section.

28 Vdc, 400W, Voice and Data Base Station with Broadband Antenna

Item	Quantity Supplied	DWC P/N	Item Description
1	1	RT7000-28	Transceiver, ruggedized, HF, 125W, 1.6-30 MHz, 28 Vdc (receive 100 kHz-30 MHz).
2	1	RA400	Amplifier, linear, RF power, 400W.
3	1	UPS500	Power supply, 115/230 VAC, 50-60 Hz input, 28 Vdc output.
4	1	ABB1000AN	Antenna, broadband, 2-30 MHz, 1000W, with 30m coax.
5	2	RT-MT	Mounting brackets.
6	1	MHS	Handset, military style H-189/U-type.
7	1	C991510	RT7000-28 to RA400, RF cable.
8	1	C991511	RT7000-28 to RA400, dc power cable.
9	1	C991557	UPS500 to RA400, dc power cable.
10	1	C991925	RT7000-28 to RA400, control cable.
ALE Option			
Add:	1	7000ALE	Internal FED-STD-1045A ALE module with controller software.
Mast Option			
Add:	1	AMX	Portable antenna mast kit for ABB1000AN.

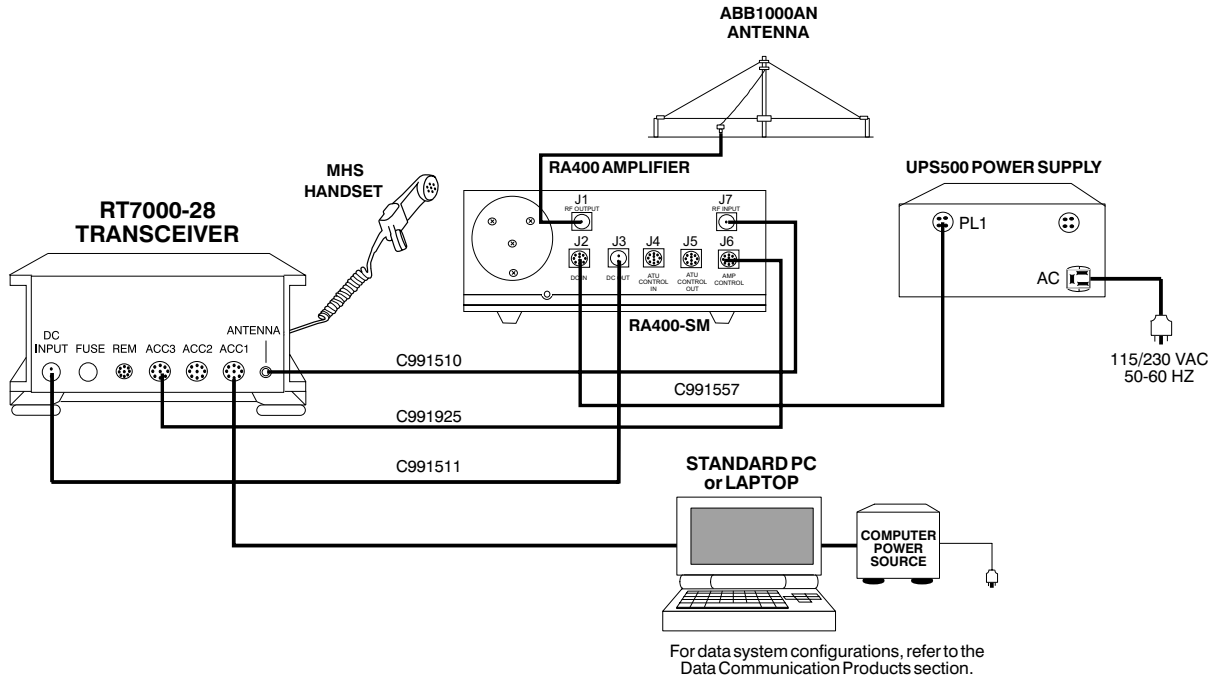

28 Vdc, 400W, Voice Base Station with Whip Antenna and FSK Remote Control

Item	Quantity Supplied	DWC P/N	Item Description
1	1	RT7000-28	Transceiver, ruggedized, HF, 125W, 1.6-30 MHz, 28 Vdc (receive 100 kHz-30 MHz).
2	1	RT7201F	Remote control console (FSK). Includes C992042.
3	1	7000RF	FSK remote control PC assembly for RT7000-28.
4	1	RA400	Amplifier, linear, RF power, 400W.
5	1	UPS500	Power supply, 115/230 VAC, 50-60 Hz input, 28 Vdc output.
6	1	RAT1000	Antenna tuner, automatic digital, 1000W. Includes C991620 antenna lead.
7	1	RA-PAS	Antenna, whip, 10m (32 ft.) with side feed base.
8	2	RT-MT	Mounting brackets.
9	2	MHS	Handset, military style H-189/U-type.
10	1	C991505	RA400 to RAT1000, RF cable.
11	1	C991510	RT7000-28 to RA400, RF cable.
12	1	C991511	RT7000-28 to RA400, dc power cable.
13	1	C991557	UPS500 to RA400, dc power cable.
14	1	C991925	RT7000-28 to RA400, control cable.
15	1	C991933	RT7000-28 to RAT1000, control cable.
16	1	C992306	RT7000-28 to RT7201F, control cable. If unterminated cables are required, order C992308 (specify length).
Remote Only Option (system control only from RT7201F)			
Add:	1	RT7000RF-28	Transceiver, ruggedized, HF, 125W, for remote use.
Delete:	1	RT7000-28	Transceiver, ruggedized, HF, 125W, 1.6-30 MHz, 28 Vdc.
	1	7000RF	FSK remote control PC assembly for RT7000-28.
	1	MHS	Handset, military style H-189/U-type.

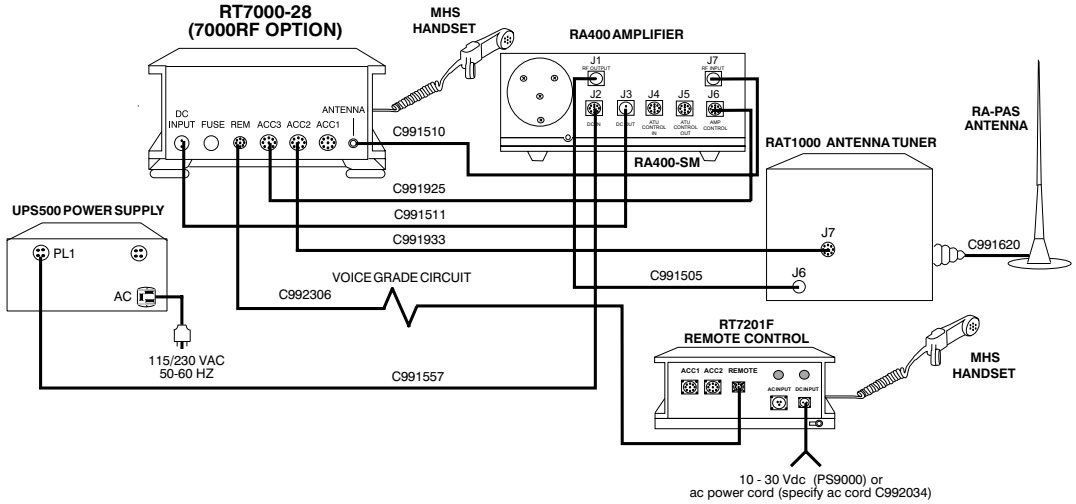

28 Vdc, 400W, Voice Base Station with Broadband Antenna and FSK Remote Control

Item	Quantity Supplied	DWC P/N	Item Description
1	1	RT7000-28	Transceiver, ruggedized, HF, 125W, 1.6-30 MHz, 28 Vdc (receive 100 kHz-30 MHz).
2	1	RT7201F	Remote control console (FSK). Includes C992042.
3	1	7000RF	FSK remote control PC assembly for RT7000-28.
4	1	RA400	Amplifier, linear, RF power, 400W.
5	1	UPS500	Power supply, 115/230 VAC, 50-60 Hz input, 28 Vdc output.
6	1	ABB1000AN	Antenna, broadband, 2-30 MHz, 1000W, with 30m coax.
7	2	RT-MT	Mounting brackets.
8	2	MHS	Handset, military style H-189/U-type.
9	1	C991510	RT7000-28 to RA400, RF cable.
10	1	C991511	RT7000-28 to RA400, dc power cable.
11	1	C991557	UPS500 to RA400, dc power cable.
12	1	C991925	RT7000-28 to RA400, control cable.
13	1	C992306	RT7000-28 to RT7201F, control cable. If unterminated cables are required, order C992308 (specify length).
Mast Option			
Add:	1	AMX	Portable antenna mast kit for ABB1000AN.
Remote Only Option (system control only from RT7201F)			
Add:	1	RT7000RF-28	Transceiver, ruggedized, HF, 125W, for remote use.
Delete:	1	RT7000-28	Transceiver, ruggedized, HF, 125W, 1.6-30 MHz, 28 Vdc.
	1	7000RF	FSK remote control PC assembly for RT7000-28.
	1	MHS	Handset, military style H-189/U-type.

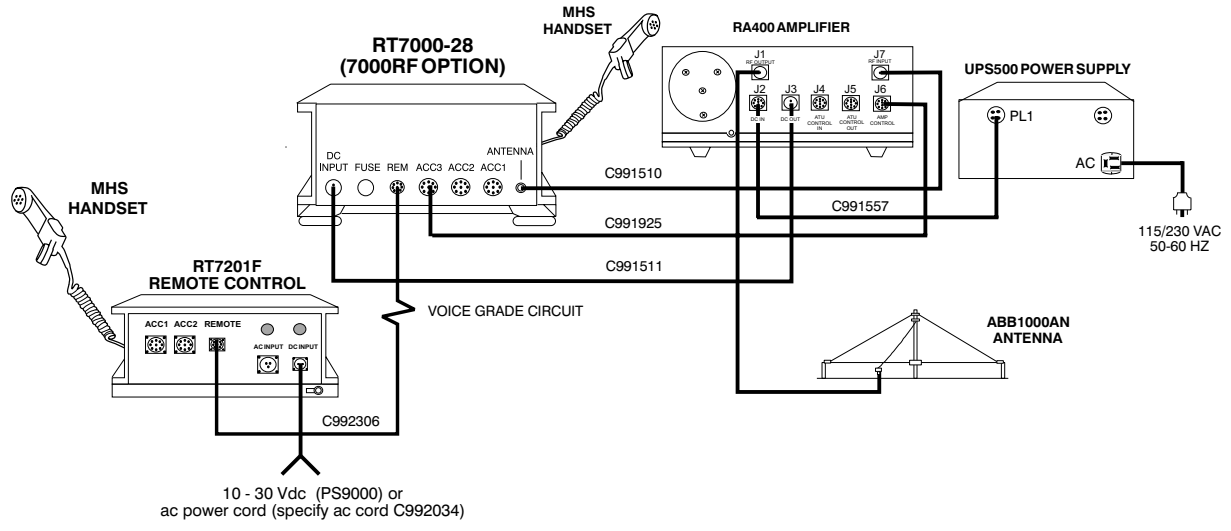

28 Vdc, 400W, Voice Base Station with Whip Antenna, and ISDN Remote Control

Item	Quantity Supplied	DWC P/N	Item Description
1	1	RT7000-28	Transceiver, ruggedized, HF, 125W, 1.6-30 MHz, 28 Vdc (receive 100 kHz-30 MHz).
2	1	RT7201I	Remote control console (ISDN). Includes C992042.
3	1	7000RI	PC assembly (ISDN) modem for RT7000-28.
4	1	RA400	Amplifier, linear, RF power, 400W.
5	1	RAT1000	Antenna tuner, automatic digital, 1000W. Includes C991620 antenna lead.
6	1	UPS500	Power supply, 115/230 VAC, 50-60 Hz input, 28 Vdc output.
7	1	RA-PAS	Antenna, whip, 10m (32 ft.) with side feed base.
8	2	RT-MT	Mounting brackets.
9	2	MHS	Handset, military style H-189/U-type.
10	1	C991505	RA400 to RAT1000, RF cable.
11	1	C991510	RT7000-28 to RA400, RF cable.
12	1	C991511	RT7000-28 to RA400, dc power cable.
13	1	C991557	UPS500 to RA400, dc power cable.
14	1	C991925	RT7000-28 to RA400, control cable.
15	1	C991933	RT7000-28 to RAT1000, control cable.
16	1	C992306	RT7000-28 to RT7201I, control cable. If unterminated cables are required, order C992308 (specify length).
Remote Only Option (system control only from RT7201I)			
Add:	1	RT7000RI-28	Transceiver, ruggedized, HF, 125W, for remote use.
Delete:	1	RT7000-28	Transceiver, ruggedized, HF, 125W, 1.6-30 MHz, 28 Vdc.
	1	7000RI	PC assembly (ISDN) modem for RT7000-28.
	1	MHS	Handset, military style H-189/U-type.

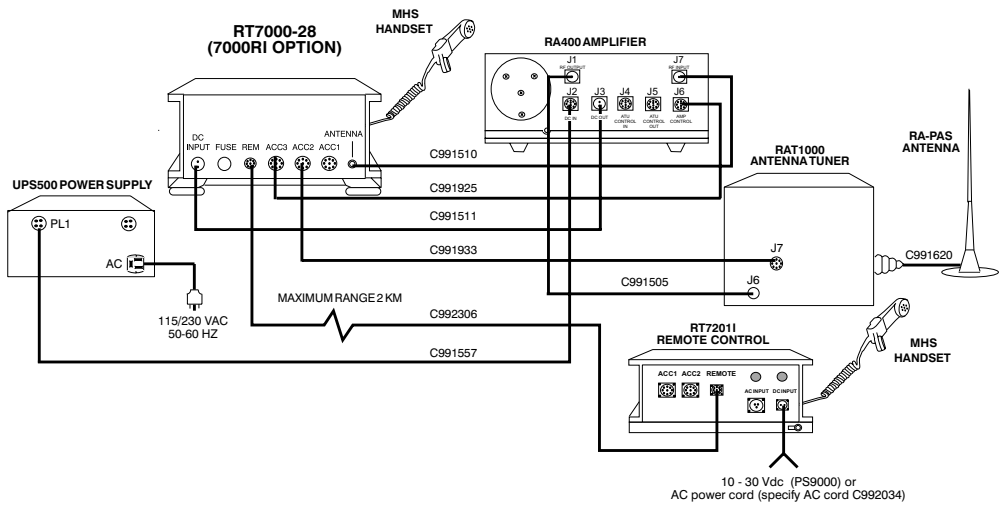

28 Vdc 400W, Voice Base Station with Broadband Antenna, and ISDN Remote Control

Item	Quantity Supplied	DWC P/N	Item Description
1	1	RT7000-28	Transceiver, ruggedized, HF, 125W, 1.6-30 MHz, 28 Vdc (receive 100 kHz-30 MHz).
2	1	RT7201I	Remote control console (ISDN). Includes C992042.
3	1	7000RI	PC assembly (ISDN) modem for RT7000-28.
4	1	RA400	Amplifier, linear, RF power, 400W.
5	1	UPS500	Power supply, 115/230 VAC, 50-60 Hz input, 28 Vdc output.
6	1	ABB1000AN	Antenna, broadband, 2-30 MHz, 1000W, with 30m coax.
7	2	RT-MT	Mounting brackets.
8	2	MHS	Handset, military style H-189/U-type.
9	1	C991510	RT7000-28 to RA400, RF cable.
10	1	C991511	RT7000-28 to RA400, dc power cable.
11	1	C991557	UPS500 to RA400, dc power cable.
12	1	C991925	RT7000-28 to RA400, control cable.
13	1	C992306	RT7000-28 to RT7201I, control cable. If unterminated cables are required, order C992308 (specify length).
Mast Option			
Add:	1	AMX	Portable antenna mast kit for ABB1000AN.
Remote Only Option (system control only from RT7201I)			
Add:	1	RT7000RI-28	Transceiver, ruggedized, HF, 125W, for remote use.
Delete:	1	RT7000-28	Transceiver, ruggedized, HF, 125W, 1.6-30 MHz, 28 Vdc.
	1	7000RI	PC assembly (ISDN) modem for RT7000-28.
	1	MHS	Handset, military style H-189/U-type.

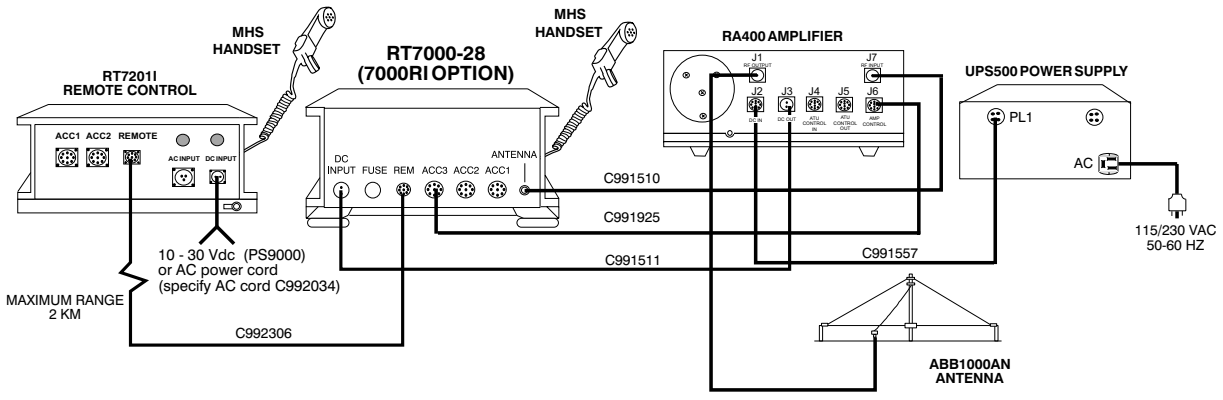

28 Vdc, 400W, Voice and Data Base Station with Whip Antenna, and ISDN Remote Control

Item	Quantity Supplied	DWC P/N	Item Description
1	1	RT7000-28	Transceiver, ruggedized, HF, 125W, 1.6-30 MHz, 28 Vdc (receive 100 kHz-30 MHz).
2	1	RT7201I	Remote control console (ISDN). Includes C992042.
3	1	7000RI	PC assembly (ISDN) modem for RT7000-28.
4	1	RA400	Amplifier, linear, RF power, 400W.
5	1	UPS500	Power supply, 115/230 VAC, 50-60 Hz input, 28 Vdc output.
6	1	RAT1000	Antenna tuner, automatic digital, 1000W. Includes C991620 antenna lead.
7	1	RA-PAS	Antenna, whip, 10m (32 ft.) with side feed base.
8	2	RT-MT	Mounting brackets.
9	2	MHS	Handset, military style H-189/U-type.
10	1	C991505	RA400 to RA400, RF cable.
11	1	C991510	RT7000-28 to RA400, RF cable.
12	1	C991511	RT7000-28 to RA400, dc power cable.
13	1	C991557	UPS500 to RA400, dc power cable.
14	1	C991925	RT7000-28 to RA400, control cable.
15	1	C991933	RT7000-28 to RAT1000, control cable.
16	1	C992306	RT7000-28 to RT7201I, control cable. If unterminated cables are required, order C992308 (specify length).
ALE Option			
Add:	1	7000ALE	Internal FED-STD-1045A ALE module with controller software.
Remote Only Option (system control only from RT7201I)			
Add:	1	RT7000RI-28	Transceiver, ruggedized, HF, 125W, for remote use.
Delete:	1	RT7000-28	Transceiver, ruggedized, HF, 125W, 1.6-30 MHz, 28 Vdc.
	1	7000RI	PC assembly (ISDN) modem for RT7000-28.
	1	MHS	Handset, military style H-189/U-type.

System diagram shown on the following page.

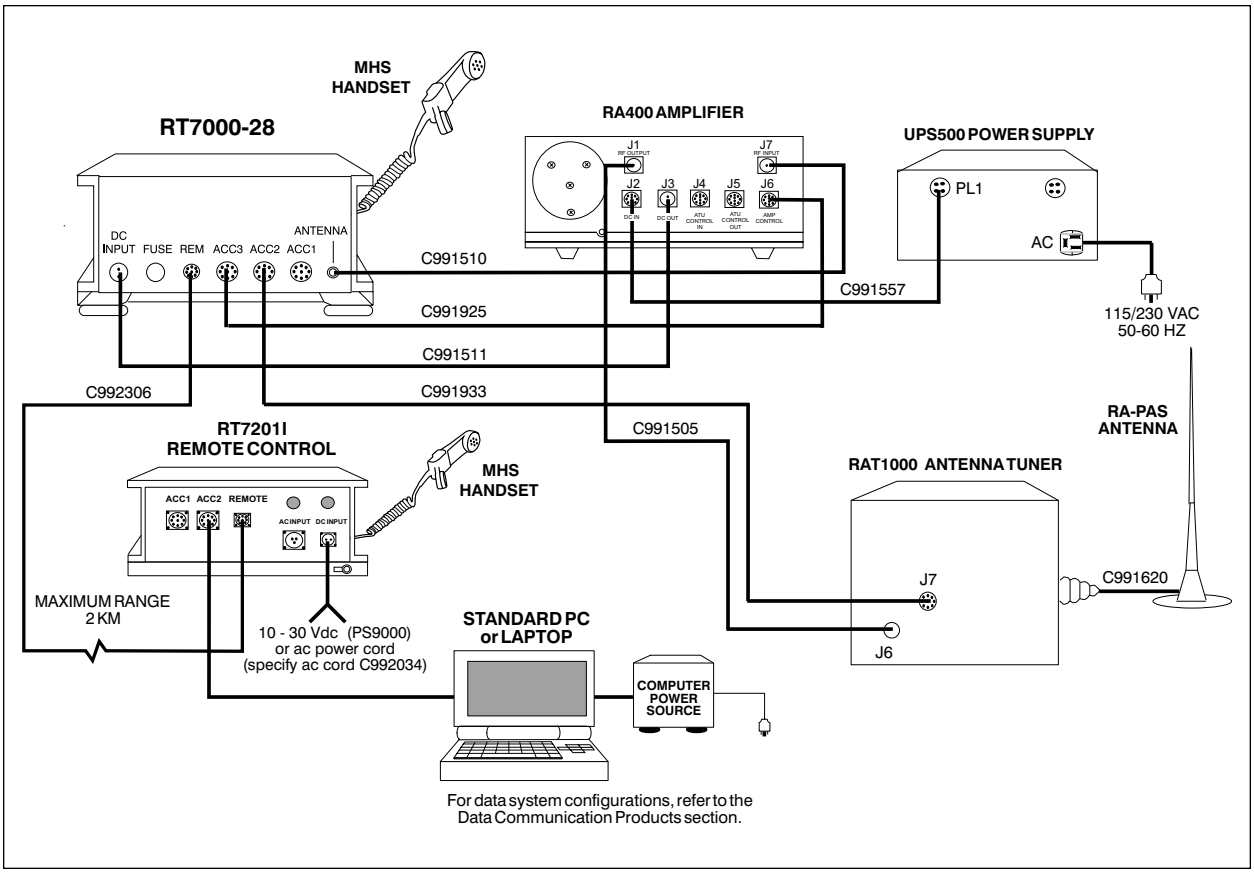
MHS
HANDSET
RT7000-28
RA400 AMPLIFIER
UPS500 POWER SUPPLY
J1
RF OUTPUT
J7
RF INPUT
J2
DC IN
J3
DC OUT
J4
ATU CONTROL IN
J5
ATU CONTROL OUT
J6
AMP CONTROL
PL1
AC
DC
INPUT
FUSE
REM
ACC3
ACC2
ACC1
ANTENNA
C991510
C991557
C991925
115/230 VAC
50-60 HZ
C991511
C992306
C991933
RA-PAS
ANTENNA
RT7201I
REMOTE CONTROL
C991505
RAT1000 ANTENNA TUNER
MHS
HANDSET
ACC1
ACC2
REMOTE
AC INPUT
DC INPUT
J7
C991620
MAXIMUM RANGE
2 KM
10 - 30 Vdc (PS9000)
or ac power cord
(specify ac cord C992034)
STANDARD PC
or LAPTOP
J6
COMPUTER
POWER
SOURCE
For data system configurations, refer to the
Data Communication Products section.

28 Vdc, 400W, Voice and Data Base Station with Broadband Antenna, and ISDN Remote Control

Item	Quantity Supplied	DWC P/N	Item Description
1	1	RT7000-28	Transceiver, ruggedized, HF, 125W, 1.6-30 MHz, 28 Vdc (receive 100 kHz-30 MHz).
2	1	RT7201I	Remote control console (ISDN). Includes C992042.
3	1	7000RI	PC assembly (ISDN) modem for RT7000-28.
4	1	RA400	Amplifier, linear, RF power, 400W.
5	1	UPS500	Power supply, 115/230 VAC, 50-60 Hz input, 28 Vdc output.
6	1	ABB1000AN	Antenna, broadband, 2-30 MHz, 1000W, with 30m coax.
7	2	RT-MT	Mounting brackets.
8	2	MHS	Handset, military style H-189/U-type.
9	1	C991510	RT7000-28 to RA400, RF cable.
10	1	C991511	RT7000-28 to RA400, dc power cable.
11	1	C991557	UPS500 to RA400, dc power cable.
12	1	C991925	RT7000-28 to RA400, control cable.
13	1	C992306	RT7000-28 to RT7201I, control cable. If unterminated cables are required, order C992308 (specify length).
ALE Option			
Add:	1	7000ALE	Internal FED-STD-1045A ALE module with controller software.
Mast Option			
Add:	1	AMX	Portable antenna mast kit for ABB1000AN.
Remote Control Option (system control only from RT7201I)			
Add:	1	RT7000RI-28	Transceiver, ruggedized, HF, 125W, for remote use.
Delete:	1	RT7000-28	Transceiver, ruggedized, HF, 125W, 1.6-30 MHz, 28 Vdc.
	1	7000RI	PC assembly (ISDN) modem for RT7000-28.
	1	MHS	Handset, military style H-189/U-type.

System diagram shown on the following page.

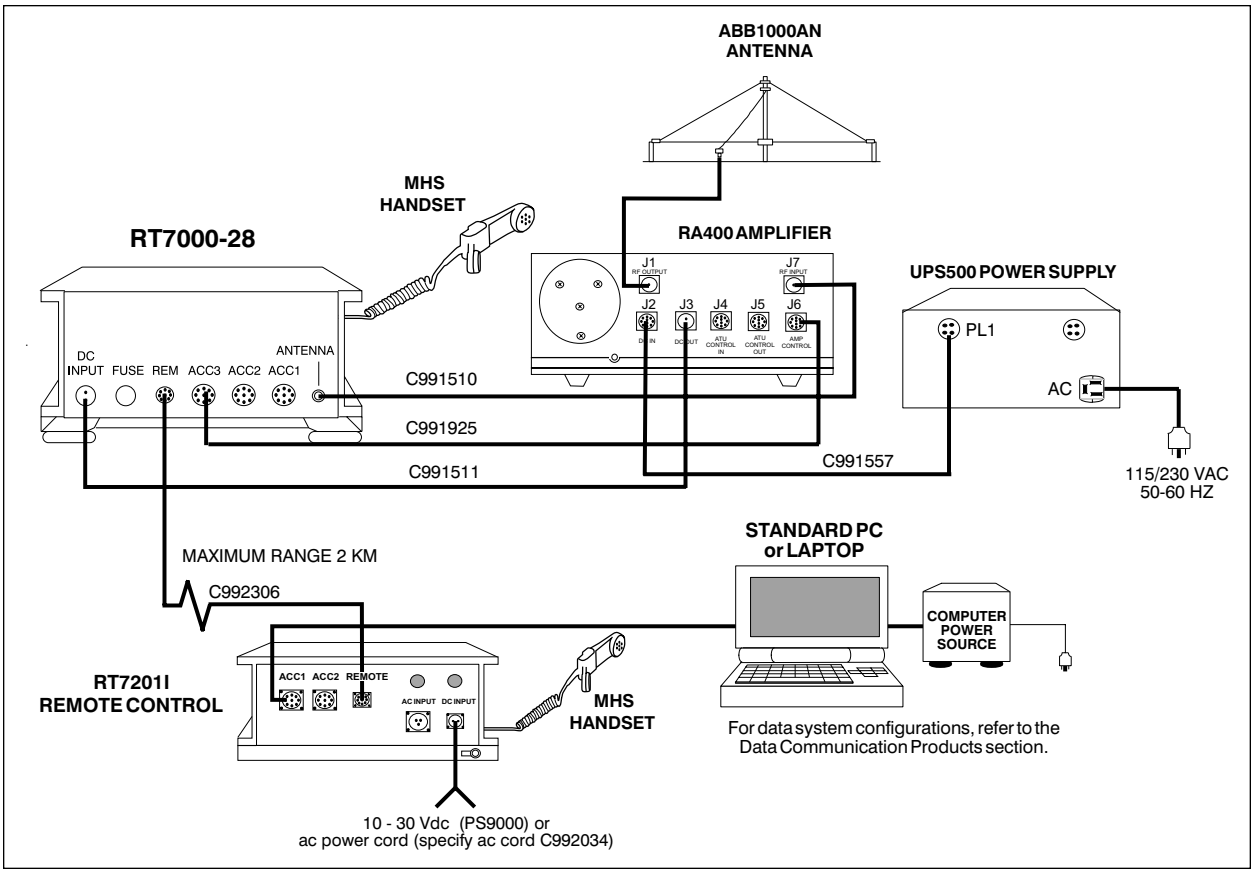
ABB1000AN
ANTENNA
MHS
HANDSET
RT7000-28
RA400 AMPLIFIER
UPS500 POWER SUPPLY
DC
INPUT
FUSE
REM
ACC3
ACC2
ACC1
ANTENNA
J1
RF OUTPUT
J7
RF INPUT
J2
J3
J4
J5
J6
PL1
AC
C991510
C991925
C991511
C991557
115/230 VAC
50-60 HZ
MAXIMUM RANGE 2 KM
C992306
STANDARD PC
or LAPTOP
COMPUTER
POWER
SOURCE
RT7201I
REMOTE CONTROL
ACC1
ACC2
REMOTE
AC INPUT
DC INPUT
MHS
HANDSET
For data system configurations, refer to the
Data Communication Products section.
10 - 30 Vdc (PS9000) or
ac power cord (specify ac cord C992034)

28 Vdc, 400W, Voice and Data Base Station with Broadband Antenna, and Power Factor Corrected Switch Mode Power Supply

Item	Quantity Supplied	DWC P/N	Item Description
1	1	RT7000-28	Transceiver, ruggedized, HF, 125W, 1.6-30 MHz, 28 Vdc (receive 100 kHz-30 MHz).
2	1	RA400	Amplifier, linear, RF power, 400W.
3	1	UPS1000SWA	Switching power supply, 28 Vdc output.
4	1	ABB1000AN	Antenna, broadband, 2-30 MHz, 1000W, with 30m coax.
5	1	RT-MT	Mounting brackets.
6	2	MHS	Handset, military style H-189/U-type.
7	1	C991510	RT7000-28 to RA400, RF cable.
8	1	C991557	UPS500 to RA400, dc power cable.
9	1	C991925	RT7000-28 to RA400, control cable.
10	1	C992119	RT7000-28 to UPS1000SWA, dc power cable.
Mast Option			
Add:	1	AMX	Portable antenna mast kit for ABB1000AN.

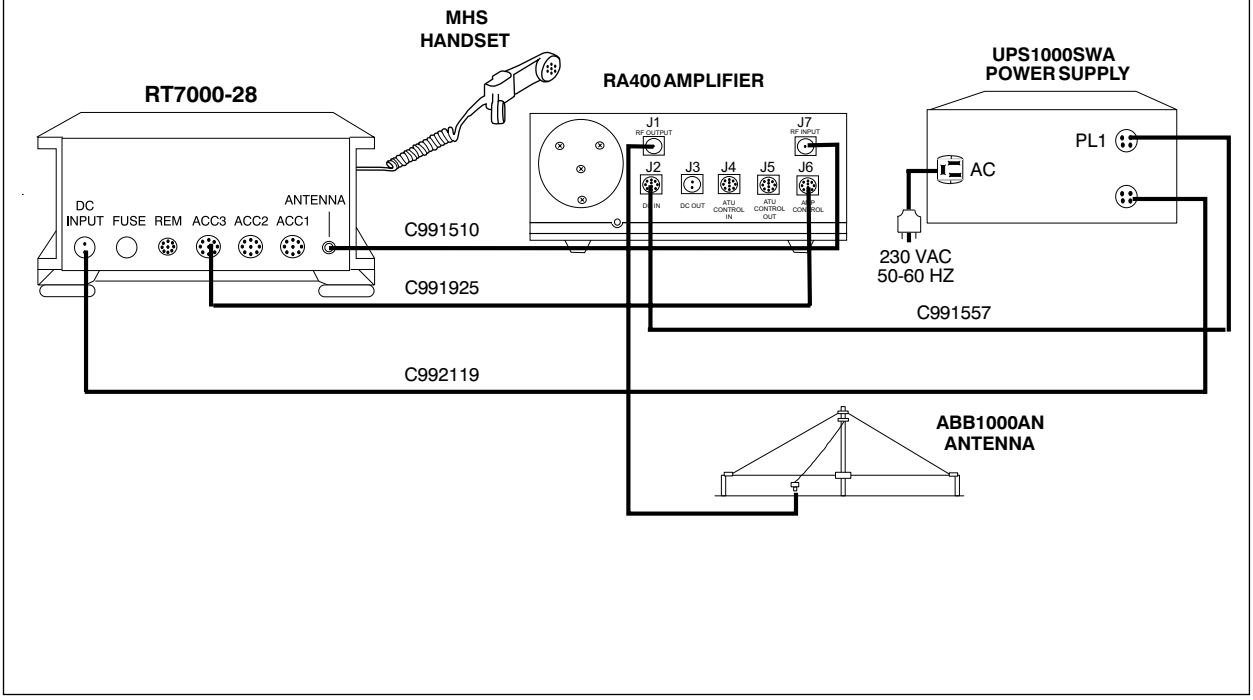

RS7500 1000W HF SYSTEM

- 1000W Continuous Output
- Voice and Data System
- 1.6 MHz-30 MHz (receive 100 kHz-30 MHz)
- Synthesized 10 Hz Steps
- Up to 1000 Memory Channels
- DSP-Based Speech Processing
- Multi-Protocol Remote Control Capabilities
- Dual ALE Capability

RS7500

The core RS7500 system is a complete 1000W base station that is stack-mounted and consists of transceiver, 1000W amplifier, power supply, and appropriate antenna system. By adding the suitable accessory equipment, Datron is able to offer a broad range of high-power voice and data systems for either local or remote control applications. Operation is from either the on-site ac mains, an appropriate generator, or +28 Vdc. Either narrow-band (whip) antennas or broadband antennas can be accommodated, however, systems using narrow-band antennas require a 1000W automatic antenna tuner (RAT1000).

The configurations shown in this section are core systems and can be enhanced and/or modified for numerous applications. Datron's trained Systems Engineering Group will be glad to assist users in configuring a custom 1000W system suited to their specific needs. All necessary equipment will be seamlessly integrated into the system as required to satisfy the desired functionality. For more information, contact your Datron Representative.

28 Vdc, 1000W, Voice Base Station with Whip Antenna

Item	Quantity Supplied	DWC P/N	Item Description
1	1	RT7000-28	Transceiver, ruggedized, HF, 125W, 1.6-30 MHz, 28 Vdc (receive 100 kHz-30 MHz).
2	1	RA1000	Amplifier, linear, RF power, 1000W.
3	1	UPS1000SWA	Switching power supply, 28 Vdc output.
4	1	RAT1000	Antenna tuner, automatic digital, 1000W. Includes C991620 antenna lead.
5	1	RA-PAS	Antenna, whip, 10m (32 ft.) with side feed base.
6	2	RT-MT	Mounting brackets.
7	1	MHS	Handset, military style H-189/U-type.
8	1	C991505	RA1000 to RAT1000, RF cable.
9	1	C991508	UPS1000SWA to RA1000, dc power cable.
10	1	C991510	RT7000-28 to RA1000, RF cable.
11	1	C991925	RT7000-28 to RA1000, control cable.
12	1	C991933	RT7000-28 to RAT1000, control cable.
13	1	C992119	RT7000-28 to UPS1000SWA, dc power cable.
Linear Power Supply Option			
Add:	1	UPS1000	Power supply, linear, 28 Vdc.
	1	C991511	RT7000-28 to RA1000, dc power cable.
Delete	1	UPS1000SWA	Switching power supply, 28 Vdc output.
	1	C992119	RT7000-28 to UPS1000SWA, dc power cable.

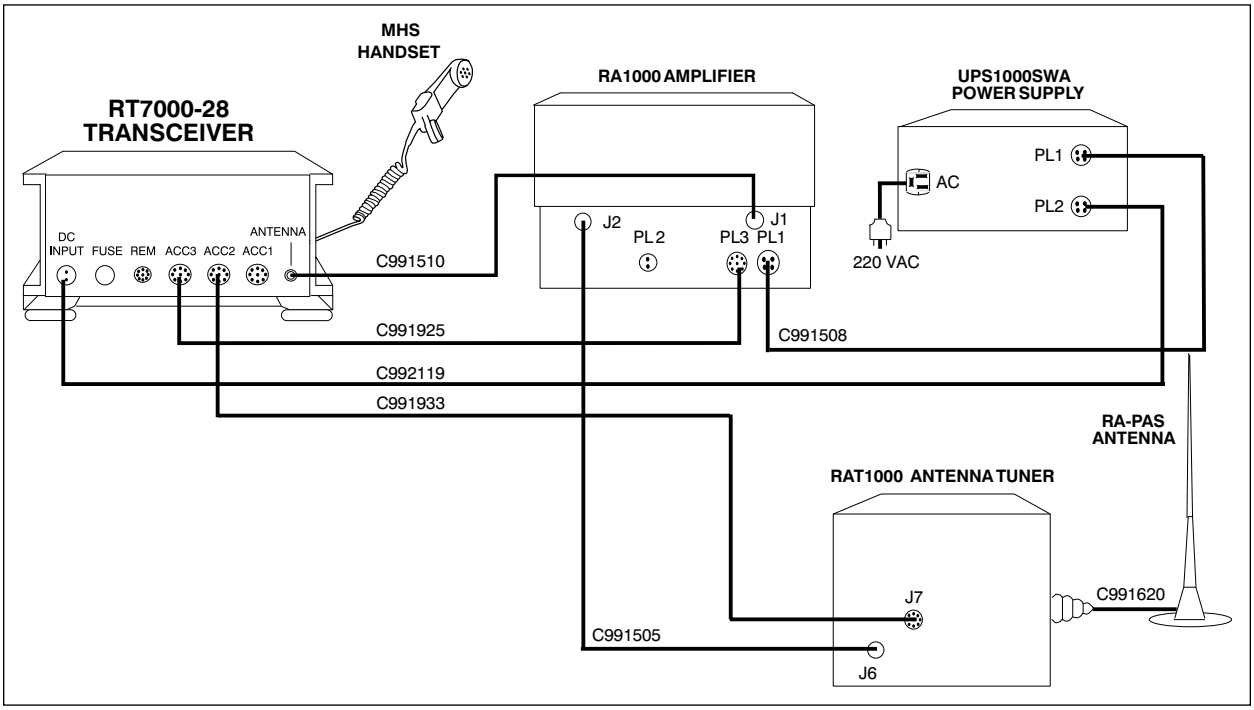

28 Vdc, 1000W, Voice Base Station with Broadband Antenna

Item	Quantity Supplied	DWC P/N	Item Description
1	1	RT7000-28	Transceiver, ruggedized, HF, 125W, 1.6-30 MHz, 28 Vdc (receive 100 kHz-30 MHz).
2	1	RA1000	Amplifier, linear, RF power, 1000W.
3	1	UPS1000SWA	Switching power supply, 28 Vdc output.
4	1	ABB1000AN	Antenna, broadband, 2-30 MHz, 1000W, with 30m coax.
5	2	RT-MT	Mounting brackets.
6	1	MHS	Handset, military style H-189/U-type.
7	1	C991508	UPS1000SWA to RA1000, dc power cable.
8	1	C991510	RT7000-28 to RA1000, RF cable.
9	1	C991925	RT7000-28 to RA1000, control cable.
10	1	C992119	RT7000-28 to UPS1000SWA, dc power cable.
Mast Option			
Add:	1	AMX	Portable antenna mast kit for ABB1000AN.
Linear Power Supply Option			
Add:	1	UPS1000	Power supply, linear, 28 Vdc.
	1	C991511	RT7000-28 to RA1000, dc power cable.
Delete	1	UPS1000SWA	Switching power supply, 28 Vdc output.
	1	C992119	RT7000-28 to UPS1000SWA, dc power cable.

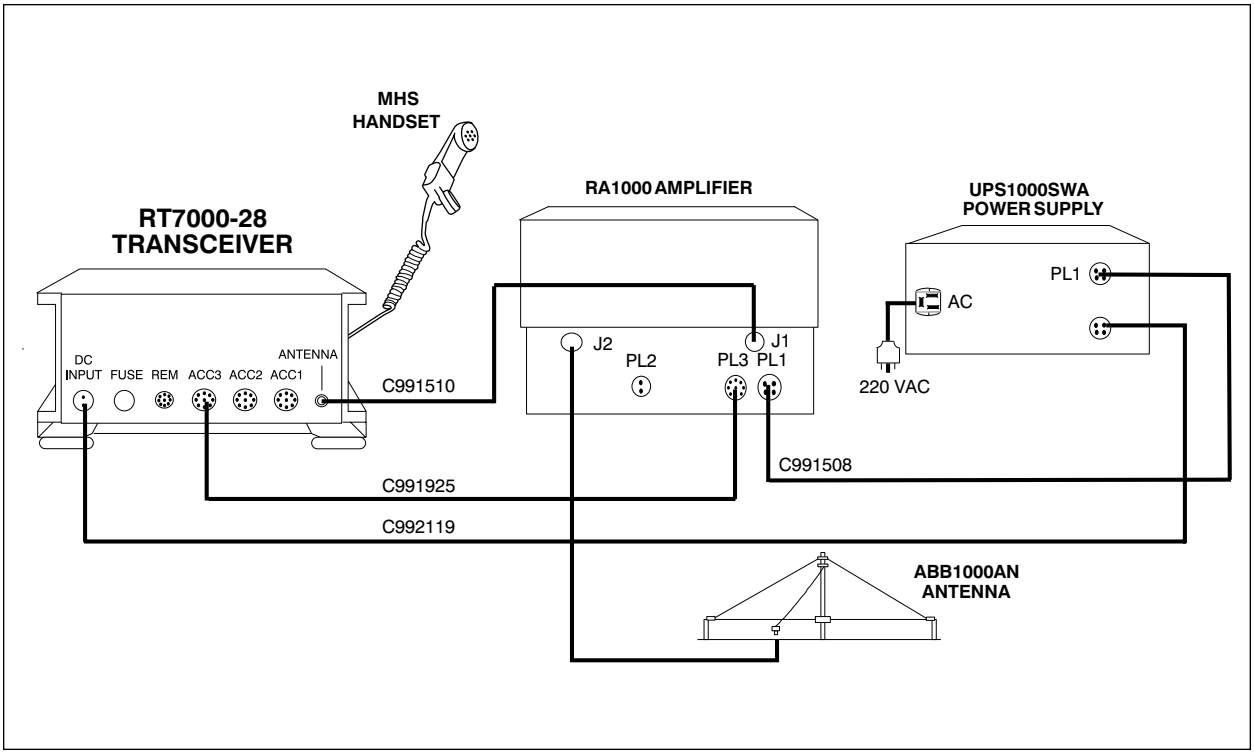

28 Vdc, 1000W, Voice and Data Base Station with Whip Antenna

Item	Quantity Supplied	DWC P/N	Item Description
1	1	RT7000-28	Transceiver, ruggedized, HF, 125W, 1.6-30 MHz, 28 Vdc (receive 100 kHz-30 MHz).
2	1	RA1000	Amplifier, linear, RF power, 1000W.
3	1	UPS1000SWA	Switching power supply, 28 Vdc output.
4	1	RAT1000	Antenna tuner, automatic digital, 1000W. Includes C991620 antenna lead.
5	1	RA-PAS	Antenna, whip, 10m (32 ft.) with side feed base.
6	2	RT-MT	Mounting brackets.
7	1	MHS	Handset, military style H-189/U-type.
8	1	C991505	RA1000 to RAT1000, RF cable.
9	1	C991508	UPS1000SWA to RA1000, dc power cable.
10	1	C991510	RT7000-28 to RA1000, RF cable.
11	1	C991925	RT7000-28 to RA1000, control cable.
12	1	C991933	RT7000-28 to RAT1000, control cable.
13	1	C992119	RT7000-28 to UPS1000SWA, dc power cable.
ALE Option			
Add:	1	7000ALE	Internal FED-STD-1045A ALE module with controller software.
Linear Power Supply Option			
Add:	1	UPS1000	Power supply, linear, 28 Vdc.
	1	C991511	RT7000-28 to RA1000, dc power cable.
Delete	1	UPS1000SWA	Switching power supply, 28 Vdc output.
	1	C992119	RT7000-28 to UPS1000SWA, dc power cable.

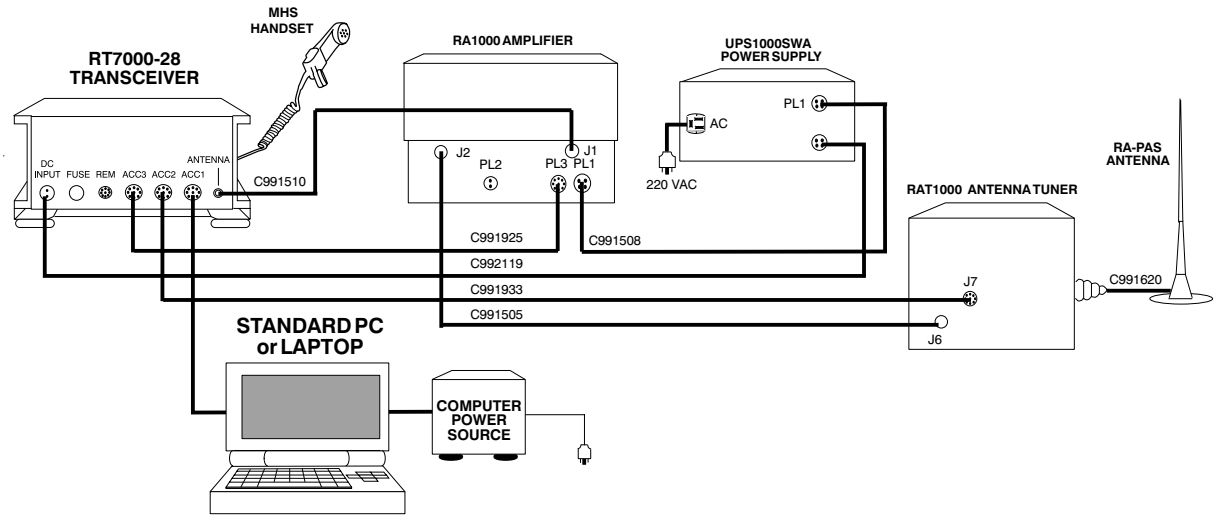

For data system configurations, refer to the Data Communication Products section.

28 Vdc, 1000W, Voice and Data Base Station with Broadband Antenna

Item	Quantity Supplied	DWC P/N	Item Description
1	1	RT7000-28	Transceiver, ruggedized, HF, 125W, 1.6-30 MHz, 28 Vdc (receive 100 kHz-30 MHz).
2	1	RA1000	Amplifier, linear, RF power, 1000W.
3	1	UPS1000SWA	Switching power supply, 28 Vdc output.
4	1	ABB1000AN	Antenna, broadband, 2-30 MHz, 1000W, with 30m coax.
5	2	RT-MT	Mounting brackets.
6	1	MHS	Handset, military style H-189/U-type.
7	1	C991508	UPS1000SWA to RA1000, dc power cable.
8	1	C991510	RT7000-28 to RA1000, RF cable.
9	1	C991925	RT7000-28 to RA1000, control cable.
10	1	C992119	RT7000-28 to UPS1000SWA, dc power cable.
ALE Option			
Add:	1	7000ALE	Internal FED-STD-1045A ALE module with controller software.
Mast Option			
Add:	1	AMX	Portable antenna mast kit for ABB1000AN.
Linear Power Supply Option			
Add:	1	UPS1000	Power supply, linear, 28 Vdc.
	1	C991511	RT7000-28 to RA1000, dc power cable.
Delete	1	UPS1000SWA	Switching power supply, 28 Vdc output.
	1	C992119	RT7000-28 to UPS1000SWA, dc power cable.

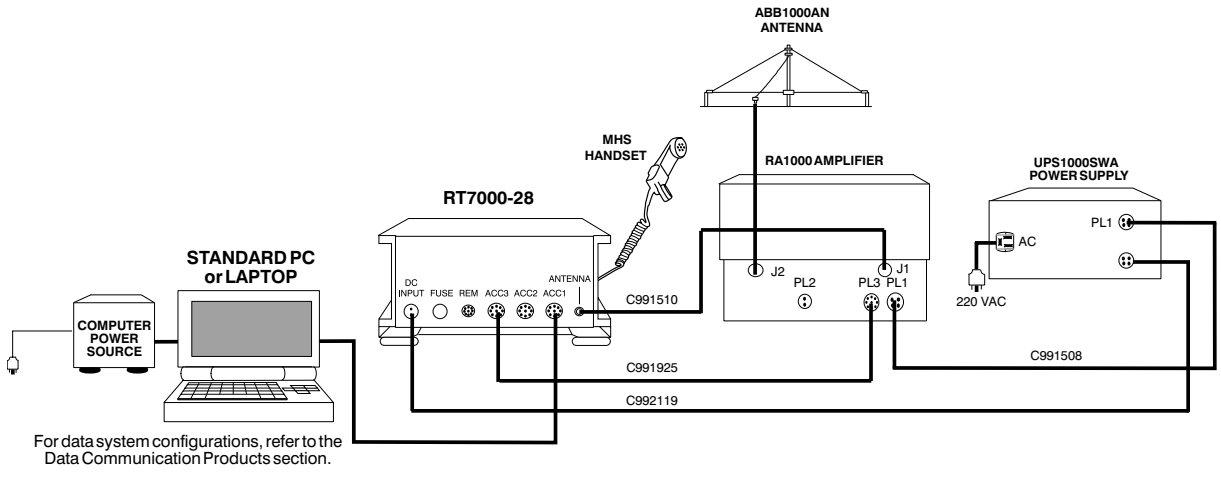

28 Vdc, 1000W, Voice and Data Base Station with Whip Antenna and FSK Remote Control

Item	Quantity Supplied	DWC P/N	Item Description
1	1	RT7000-28	Transceiver, ruggedized, HF, 125W, 1.6-30 MHz, 28 Vdc (receive 100 kHz-30 MHz).
2	1	RT7201F	Remote control console (FSK). Includes C992042.
3	1	7000RF	FSK remote control PC assembly for RT7000-28.
4	1	RA1000	Amplifier, linear, RF power, 1000W.
5	1	UPS1000SWA	Switching power supply, 28 Vdc output.
6	1	RAT1000	Antenna tuner, automatic digital, 1000W. Includes C991620 antenna lead.
7	1	RA-PAS	Antenna, whip, 10m (32 ft.) with side feed base.
8	2	RT-MT	Mounting brackets.
9	2	MHS	Handset, military style H-189/U-type.
10	1	C991505	RA1000 to RAT1000, RF cable.
11	1	C991508	UPS1000SWA to RA1000, dc power cable.
12	1	C991510	RT7000-28 to RA1000, RF cable.
13	1	C991925	RT7000-28 to RA1000, control cable.
14	1	C991933	RT7000-28 to RAT1000, control cable.
15	1	C992119	RT7000-28 to UPS1000SWA, dc power cable.
16	1	C992306	RT7000-28 to RT7201F, control cable. If unterminated cables are required, order C992308 (specify length).
Remote Only Option (system control only from RT7201F)			
Add:	1	RT7000RF-28	Transceiver, ruggedized, HF, 125W, for remote use.
Delete:	1	RT7000-28	Transceiver, ruggedized, HF, 125W, 1.6-30 MHz, 28 Vdc.
	1	7000RF	FSK remote control PC assembly for RT7000-28.
	1	MHS	Handset, military style H-189/U-type.
Linear Power Supply Option			
Add:	1	UPS1000	Power supply, linear, 28 Vdc.
	1	C991511	RT7000-28 to RA1000, dc power cable.
Delete	1	UPS1000SWA	Switching power supply, 28 Vdc output.
	1	C992119	RT7000-28 to UPS1000SWA, dc power cable.

System diagram shown on the following page.

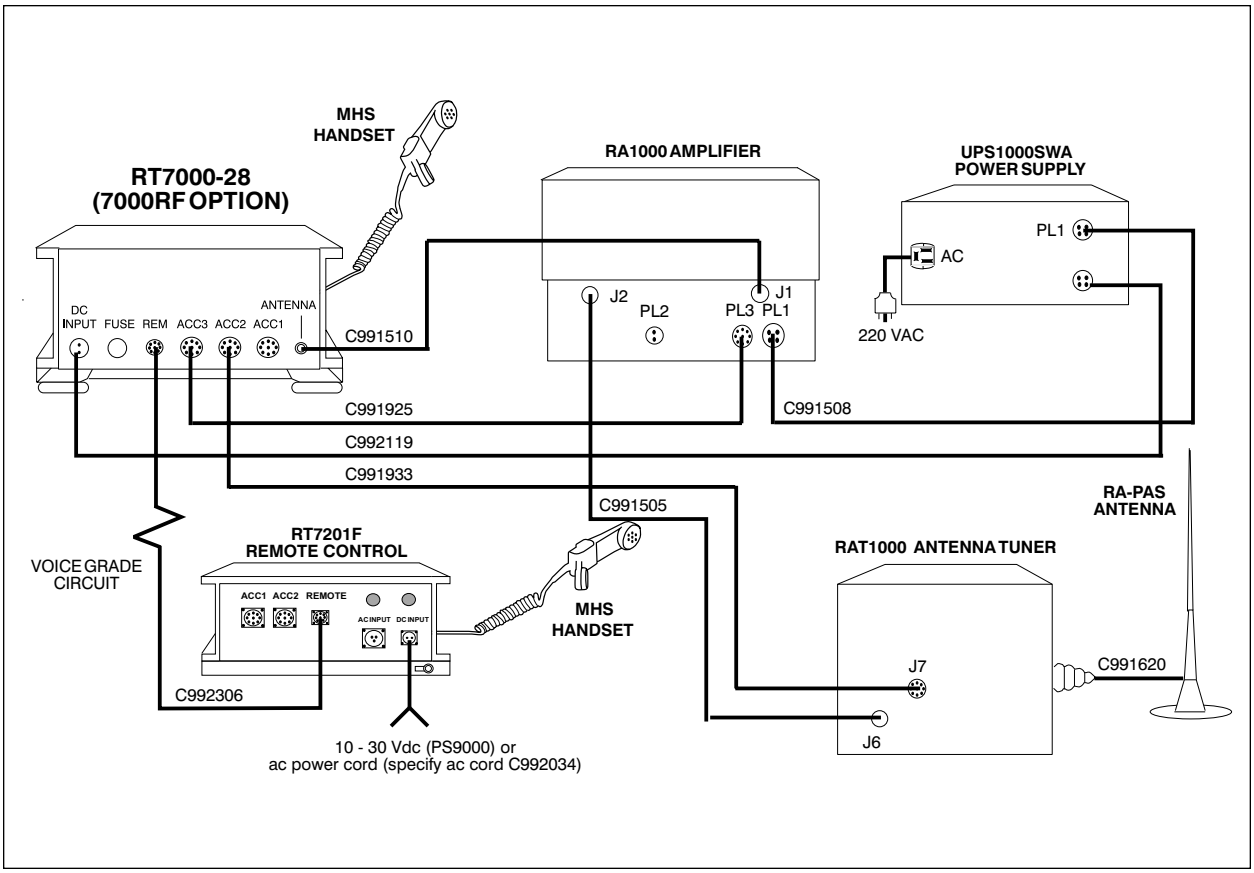
MHS
HANDSET
RT7000-28
(7000RF OPTION)
DC
INPUT
FUSE
REM
ACC3
ACC2
ACC1
ANTENNA
C991510
RA1000 AMPLIFIER
J2
PL2
PL3
J1
PL1
UPS1000SWA
POWER SUPPLY
PL1
AC
220 VAC
C991925
C991508
C992119
C991933
C991505
RA-PAS
ANTENNA
VOICE GRADE
CIRCUIT
RT7201F
REMOTE CONTROL
ACC1
ACC2
REMOTE
AC INPUT
DC INPUT
MHS
HANDSET
RAT1000 ANTENNA TUNER
J7
C991620
C992306
J6
10 - 30 Vdc (PS9000) or
ac power cord (specify ac cord C992034)

28 Vdc, 1000W, Voice and Data Base Station with Broadband Antenna and FSK Remote Control

Item	Quantity Supplied	DWC P/N	Item Description
1	1	RT7000-28	Transceiver, ruggedized, HF, 125W, 1.6-30 MHz, 28 Vdc (receive 100 kHz-30 MHz).
2	1	RT7201F	Remote control console (FSK). Includes C992042.
3	1	7000RF	FSK remote control PC assembly for RT7000-28.
4	1	RA1000	Amplifier, linear, RF power, 1000W.
5	1	UPS1000SWA	Switching power supply, 28 Vdc output.
6	1	ABB1000AN	Antenna, broadband, 2-30 MHz, 1000W, with 30m coax.
7	2	RT-MT	Mounting brackets.
8	2	MHS	Handset, military style H-189/U-type.
9	1	C991508	UPS1000SWA to RA1000, dc power cable.
10	1	C991510	RT7000-28 to RA1000, RF cable.
11	1	C991925	RT7000-28 to RA1000, control cable.
12	1	C992119	RT7000-28 to UPS1000SWA, dc power cable.
13	1	C992306	RT7000-28 to RT7201F, control cable. If unterminated cables are required, order C992308 (specify length).
Mast Option			
Add:	1	AMX	Portable antenna mast kit for ABB1000AN.
Remote Only Option (system control only from RT7201F)			
Add:	1	RT7000RF-28	Transceiver, ruggedized, HF, 125W, for remote use.
Delete:	1	RT7000-28	Transceiver, ruggedized, HF, 125W, 1.6-30 MHz, 28 Vdc.
	1	7000RF	FSK remote control PC assembly for RT7000-28.
	1	MHS	Handset, military style H-189/U-type.
Linear Power Supply Option			
Add:	1	UPS1000	Power supply, linear, 28 Vdc.
	1	C991511	RT7000-28 to RA1000, dc power cable.
Delete	1	UPS1000SWA	Switching power supply, 28 Vdc output.
	1	C992119	RT7000-28 to UPS1000SWA, dc power cable.

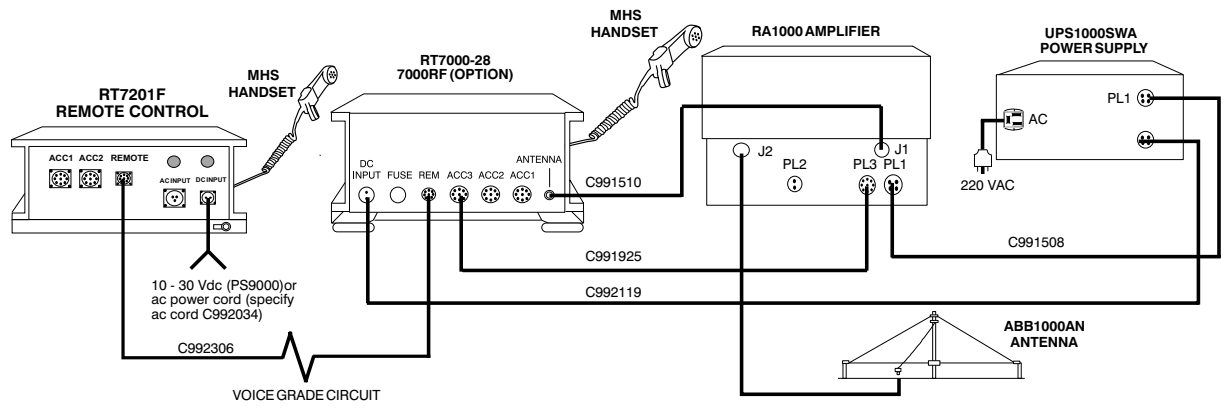

RT7000-SERIES TRANSCEIVER CABLES, SPARES, AND MANUALS

Cables for the RT7000-Series

All cables come complete with connectors unless otherwise indicated.

DWC P/N	Description
C991505	N-type connector, RF, 5m.
C991508	UPS1000SWA to RA1000, dc power, 0.6m.
C991510	RT7000 to RA400/RA1000, RF, 0.6m.
C991511	RT7000 to RA400/RA1000/UPF7000, dc power, 0.6m.
C991552	RA400 to RAT1000, control, 5m.
C991557	UPS500, dc power, 0.6m.
C991558	RA400, open-ended, dc power, 0.6m.
C991620	Antenna tuner, antenna lead-in, 0.5m.
C991925	RT7000 to RA400/RA1000, control, 0.6m.
C991926	RT7000 to RA400/RAT1000, control, antenna tuner, 0.6m.
C991933	RT7000 to RAT1000, control, 5m.
C991936	RT7000 to RT5810-12 and -28 and RT5850-28, control, 1m.
C991937	RT7000 to RT110A, control, 1m.
C991941	RT7000 to PF7000, power, 2m.
C991943	RT7000E to RT7201E, control, 9m.
C991959	TWPSA to UPF7000, power, 0.9m.
C991971	RT7000 to TWPSA, dc power, 1m.
C991974	RT7000 to PC, data, 1.8m.
C991982	UPS500 to TWPSA, dc power, 1m.
C992007	RT5200 to RT7000 (ACC1), audio, 2.1m.
C992016	RT7000 to RT7000IOX, control/data/audio, 2m.
C992034	AC power with standard 115V plug, 1.8m.
C992037	RT5300 to standard PC, 2m.
C992042	RT7201F/RT7201I, dc power, 3m.
C992046	RT7000 to RT5880, control, 1.5m.
C992052	RT7000 to RT5200, control, 2m.
C992060	RT7000 to RT5300, control, 2m.
C992065	TWPSA to RA400, power, 2m.
C992093	RT7000 to RT5850, control, 2m.
C992098	C1010 and C1021, control, 0.7m.
C992115	RT7000 to PC, audio, 1.8m.
C992119	RT7000 to UPS1000SWA, power, 1m.
C992127	RT7000 to C1021 and C992200, Y-cable, 1m.
C992132	RT7000-ACC2 to DB9, serial, 2m.
C992142	RT7000 to RAT7000B, control, 5m.
C992160	RT7000 (ACC2) to RT5300, audio, 1.8m.
C992200	RT7000 (Y-cable, C992127) to RAT7000B, control, 5m.
C992203	RT110A to PC, control, 1.5m.
C992204	RT110A to PC, data, 1.5m.
C992205	RT7110 to PC, data, 1.5m.
C992306	RT7000 to remote control head, 10m.
C992308	RT7000 unterminated cable, specify length.

Note: Standard length of each cable is indicated in cable description. To order nonstandard cable lengths, contact your Datron Representative.

Spare Module Assemblies for the RT7000-Series

When ordering spare module assemblies specify module and serial number of equipment.

DWC P/N	Description
001-00120	Front Panel LCD Assembly, RT7000
001-00203	Reference Control Assembly, RT7000
001-00320	Filter Assembly, RT7000
001-00600	Audio Assembly, RT7000
001-00710	75 MHz IF, RT7000
001-00800	5 MHz IF Assembly, RT7000
001-00901	Synthesizer Assembly, RT7000
001-01100	Processor Assembly, RT7000
001-01200	Squelch Assembly, RT7000
004-01110	Front Panel Processor Assembly, RT7000
004-12260	RF Amplifier Assembly, 12 Vdc, RT7000-12
004-12401	Power Supply/VSWR PC Assembly, RT7000
004-28100	28-12 Vdc Converter Assembly, RT7000-28
004-28260	RF Amplifier Assembly, 28 Vdc, RT7000-28
7000ACH	1000 Memory Channel Option
7000ALE	ALE Option Module
7000ENCR	Encryption Option Module
7000HS	High Stability Option Module
7000NB	Noise Blanker Option Module
7000RCDR	Recorder Option
7000RF	RCU FSK Option Module
7000RI	RCU ISDN Option Module
7000RS	RS422/423/485 Option Module
7000TC	TC/SC/TA Option Module
7000VEM	DSP Voice Enhancement Module
7000WB1	WB Data Filter Option Module
RA1000-MOD	RA1000 Amplifier Assembly

Note: For information on spare subassemblies not listed, contact your Datron Representative.

Maintenance Kits for the RT7000-Series

Datron offers a number of maintenance kits to assist the repair technician in troubleshooting equipment.

7000EXT
Extender board kit, includes boards and card puller.

RT7000TK
Basic tool repair kit with carrying case. Includes adapters, extension cables, and specialized tools to service the RT7000.

SMTRK
Surface mount technology repair kit consisting of master unit and various handpieces for a wide range of surface mount and through-hole repair capability. Available for 115 VAC, 50-60 Hz or 230 VAC, 50 Hz. Specify ac operating voltage when ordering.

Spares Kits for the RT7000-Series

DWC Product P/N	Module Kit (MK)	Module Repair Kit (MRK)	Parts Spare Kit (PSK)	Surface Mount Repair Kit (SMRK)
RA1000	✓	✓	✓	
RA400	✓	✓	✓	
RAT1000	✓	✓	✓	
RAT7000B	✓	✓	✓	
RT5200	✓		✓	
RT5300	✓		✓	
RT7000-12	✓	✓	✓	✓
RT7000-28	✓	✓	✓	✓
RT7000RF	Use the RT7000-12	Use the RT7000-12	Use the RT7000-12	Use the RT7000-12
RT7000RI	Use the RT7000-28	Use the RT7000-28	Use the RT7000-28	Use the RT7000-28
RT7000RX-12	Use the RT7000-12	Use the RT7000-12	Use the RT7000-12	Use the RT7000-12
RT7000RX-28	Use the RT7000-28	Use the RT7000-28	Use the RT7000-28	Use the RT7000-28
RT7000TX-12	Use the RT7000-12	Use the RT7000-12	Use the RT7000-12	Use the RT7000-12
RT7000TX-28	Use the RT7000-28	Use the RT7000-28	Use the RT7000-28	Use the RT7000-28
RT7110	✓		✓	
RT7201F	✓		✓	
RT7201I	✓		✓	
TWPSA			✓	
UPF7000			✓	
UPS1000			✓	
UPS1000SWA			✓	
UPS500			✓	

Note: To order an individual spares kit, add the appropriate suffix (i.e., -MK, -MRK, -PSK, -SMRK) to the product part number. For a complete list of Module Kit, Module Repair Kit, and Parts Spares Kit, see the Spares section.

Manuals for the RT7000-Series

DWC P/N	Operator (supplied with unit)	Technical (order separately)	Operator/Technical (supplied with unit)
ABB1000-MS			✓
ABB100-MS			✓
AMX-MS			✓
RA1000-MS			✓
RA400-MS		✓	
RA400-MSOP	✓		
RAT1000-MS		✓	
RAT1000-MSOP	✓		
RAT7000B-MS			✓
RT5200-MS			✓
RT5810-MS			✓
RT5830-MS			✓
RT7000-MS		✓	
RT7000-MSOP	✓		
RT7110-MS		✓	
RT7110-MSOP	✓		
RT7201F-MS		✓	
RT7201F-MSOP	✓		
RT7201I-MS		✓	
RT7201I-MSOP	✓		
TW/RT5300-MS			✓
TW5820-MS			✓
TW5850-MS			✓
UPF7000-MS			✓
UPS1000SWA-MS			✓
UPS500/1000-MS			✓

Note: For a detailed list of Datron documentation, see the Manual section. For system documentation, contact your Datron Representative.

PRC1099A 1.6-30 MHz MANPACK TRANSCEIVER

- 1.6 MHz-30 MHz
- 10 Hz Synthesized Steps
- 20/100/400W
- 100 Memory Channels
- Fully Automatic Antenna Tuning
- MIL-STD-810 Compliant
- Manpack/Mobile/Base
- ±1 ppm Frequency Stability
- Internal ALE Options

The PRC1099A is Datron's latest generation of HF tactical manpack radios. It provides 20W output power, covers the full 1.6 to 30 MHz frequency band with 10 Hz resolution, and is rugged, lightweight, and easy to use. Any of its 100 preset memory channels can be configured for maximum mission flexibility.

The PRC1099A is designed as the core of a complete family of HF products. It can be configured with a broad range of ancillaries and accessories to create a wide variety of manpack, mobile, or fixed station systems. This "building block" approach allows a user to have 20, 100, or 400W systems by adding other Datron accessory equipment to the core radio as required. Each PRC1099A system is immersible, designed for applications normally encountered in extremely harsh environments, and is rated for continuous duty-cycle operation.

The PRC1099A has a built-in antenna tuner and can be used with both whip and long-wire antennas. A wide variety of internal options are available for the PRC1099A including FED-STD-1045A ALE and Datron's proprietary adaptive link establishment systems.

Tactical Manpack PRC1099A Radio

PRC1099A
HF-SSB synthesized 1.6-30 MHz manpack transceiver, 12 Vdc, 5W or 20W PEP, and average, voice (USB/LSB), CW, and data modes are standard. Simplex and semi-duplex, continuous coverage, 10 Hz steps, with 100 programmable memory channels. Designed to the requirements of MIL-STD-810 for operation under severe vibration and shock environments. The PRC1099A is fully interoperable with most U.S. military standard audio accessories, antennas, and specialized accessories such as crypto equipment. Order cables and accessories separately. The basic PRC1099A includes the transceiver, the battery box, and an operator manual. A diagram of a typical manpack system is shown later in this section.

Options for the PRC1099A

Prices include factory installation at the time the radio is ordered. For field installation, contact your Datron Representative.

1099AAME
Provides AME transmit capability.

1099ALE
FED-STD-1045A ALE module provides a fully compatible system for ALE operation, including high-speed scanning, sounding, link quality analysis, and send/receive orderwire message capability. Provides selective calling as well as "best available frequency" selection. Use external data terminal (optional) or alphanumeric keypad of radio for orderwire message composition. Custom LCD provides alphanumeric display of message. Programming of all ALE functions possible from radio front panel controls.

1099IBC
Internal battery charger permits charging of attached NiCd battery from an 11-30 Vdc source. Includes connecting cable.

Note: The 1099IBC cannot be used with lead-calcium batteries.

1099TA/TC
Provides all functions of Selcall, Transcall, and TransAdapt. Selcall offers digital selective calling. Provides calling of selected station with automatic answer back and alarm. Selective calling stops scan. Transcall offers automatic path evaluation and link establishment (ALE) within selected multiple scan groups (ten channels maximum suggested per scan group). Establishes link on "best available frequency" with automatic alarm. An external alarm signal is available for both Transcall and Selcall operation. TransAdapt offers automatic path evaluation and linking based on "first usable frequency." This reduces the time required to establish contact on a "usable quality" frequency. Compatible with PRC1099A TransAdapt unit.

Batteries for the PRC1099A

BB-LA6
Sealed, lead-calcium rechargeable battery (6 AH).

BB-NC4
"D" size battery cassette for dry-cell batteries or "D" NiCd cells. Cassette does not include batteries. Only usable at 5W power level with "D" dry-cell batteries.

Battery Chargers/Power Supplies for the PRC1099A

Various configurations of charging accessories and cables are illustrated later in this section.

PRC-BC4
Multiple battery charger. Charges up to four BB-series lead-calcium batteries simultaneously. Automatic rapid/taper charge characteristic. Individual charge status indicators. Includes three C991610 charging cables and C991609 dc power cable. 115/230 VAC, 24 Vdc input. Specify ac voltage when ordering.

PRC-HC-30
Hand-crank generator, 30W. For recharging 12 Vdc battery packs such as BB-LA6. Double handle. Use monopod or tree mount. Complete with C991611 adapter cable for charging battery installed in radio. Order C991618 cable to charge stand-alone battery.

PRC-HC-MP
Monopod mount. For hand-crank generators. Unfolds to convenient operating height.

PRC-HC-TM
Tree mount with tree strap. For hand-crank generators.

PRC-PS
Power supply/battery charger for BB-series sealed lead-calcium battery pack. Will charge attached battery and operate radio simultaneously. Automatic rapid/taper charge characteristic. Includes C991608 control cable and C991609 dc power cable. 115/230 VAC, 24 Vdc input. Specify ac voltage when ordering.

PRC-SPU-10
Lightweight, fold-up, 10W solar panel. For recharging 12 Vdc battery packs such as BB-LA6. Complete with C991613 adapter cable for charging battery installed in radio. Order C991617 cable to charge stand-alone battery.

Charging Cables for the PRC1099A

C991608
PRC-PS to radio power/charging cable.

C991609
PRC-PS input dc power cable.

C991610
PRC-BC4 to BB-LA6 charging cable.

C991611
Hand-crank generator to radio charging cable.

C991613
PRC-SPU-10 to radio charging cable.

C991617
PRC-SPU-10 to stand-alone battery charging cable.

C991618
Hand-crank generator to stand-alone battery charging cable.

Carrying Accessory for the PRC1099A

LC-2
Tubular, lightweight, backpack carrying frame for manpack operation.

Audio Accessories for the PRC1099A

All PRC1099A audio accessories are terminated with 5-pin, twist-lock, and military-style connectors that are interchangeable among Datron military products.

DSP9000HS
Ruggedized, half-duplex audio ciphering handset. Normal operation is fully automatic; user simply selects Plain or Cipher mode.

H-140/U
H-140/U ruggedized headphones.

H-250/U
Noise canceling, non-repairable version of MHS.

Note: The H-250/U requires a U.S. State Department license for export.

H3M
Headset-boom microphone. Single earphone low profile. Will fit under GI Kevlar helmet with clip-on push-to-talk switch.

KYR
Morse key with 36 inch (0.9m) cord.

MHS
H-189/U military handset. Repairable.

Manpack and Wire Antennas for the PRC1099A

AGK
Grounding kit; 2-wire braided 15m each, counterpoise/ground stake to enhance efficiency with short antennas.

ALD
Lightweight tactical dipole kit with 10m RG-58/U feedline and erection lines.

ALD-R
ALD-R is an HF, adjustable-length, deployable, dipole antenna covering the full 2 to 30 MHz frequency range. Comes complete with a laminate carrying bag and manual. 250W power handling capability with a maximum 1.7:1 VSWR at resonance, and features superior mechanical and cosmetic characteristics, which provides greater durability and field reliability.

ALD-REM
Remote tactical dipole. Can also be used as long-wire. Includes 8m of 300 ribbon transmission line, long-wire adapter, and counterpoise. Can be used to provide NVIS-type operation when set up properly. Requires internal radio antenna tuner and must be connected to transceiver whip antenna port.

ALW-R
Ruggedized long-wire antenna kit. Includes 30m antenna wire on bobbin insulator, hang-up cord, and counterpoise/ground stake. LWA long-wire adapter for whip antenna port also provided.

AT-271A/U
3m (10 ft.) folding whip antenna with AB-591/U flexible antenna base.

LWA
Long-wire adapter used for connection of PRC1099A to long-wire antennas.

PRC1099A Manpack System

Item	Quantity Supplied	DWC P/N	Description
1	1	PRC1099A	Transceiver HF/SSB 1.6-30 MHz.
2	1	AT-271A/U	Antenna, whip, 3m (10 ft.) with AB-591/U flexible base.
3	1	BB-LA6	Battery, rechargeable.
4	1	LC-2	Tubular, lightweight, backpack carrying frame.
5	1	MHS	Handset, military style H-189/U-type.

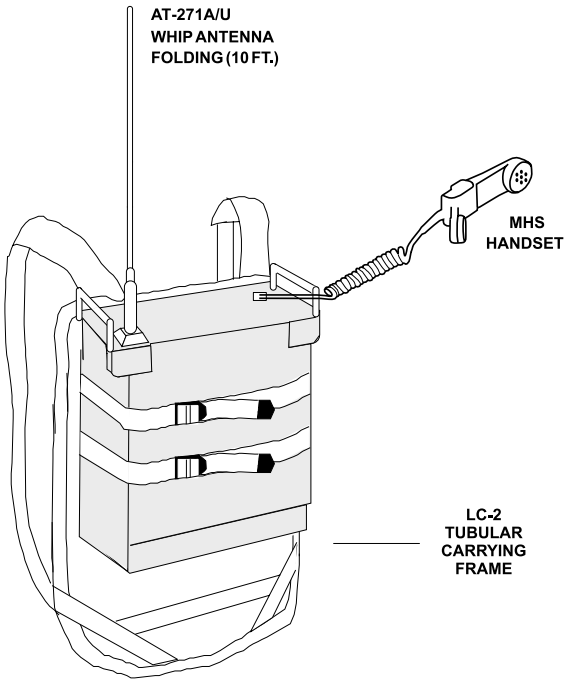

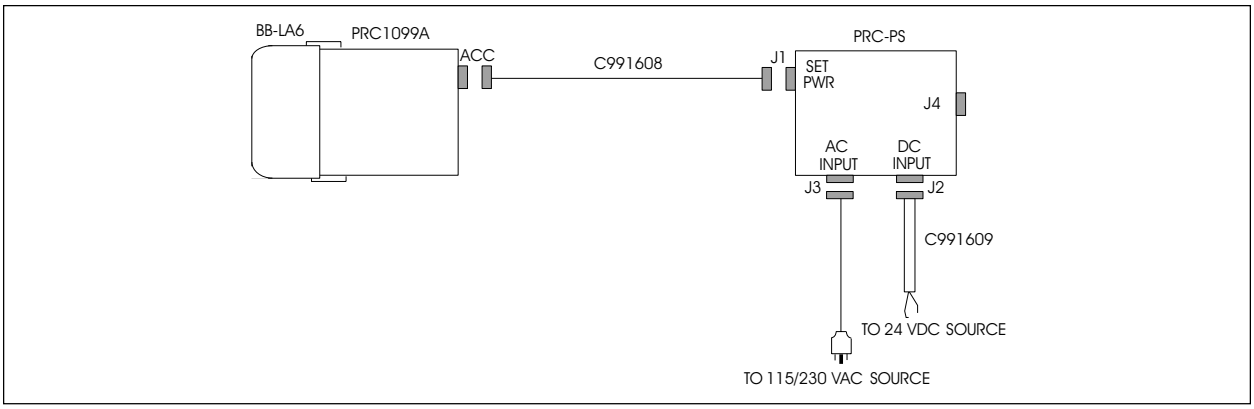

PRC-PS charging battery attached to PRC1099A.

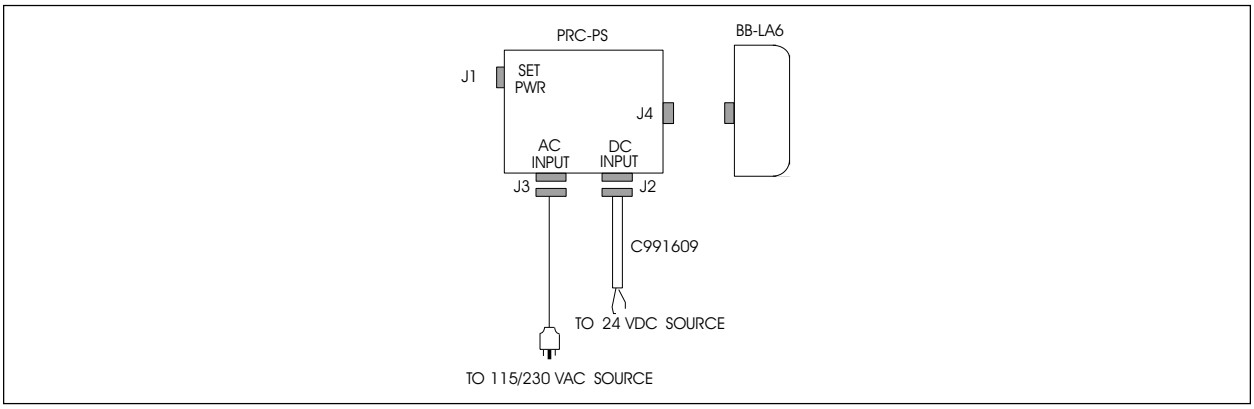

PRC-PS charging battery directly.

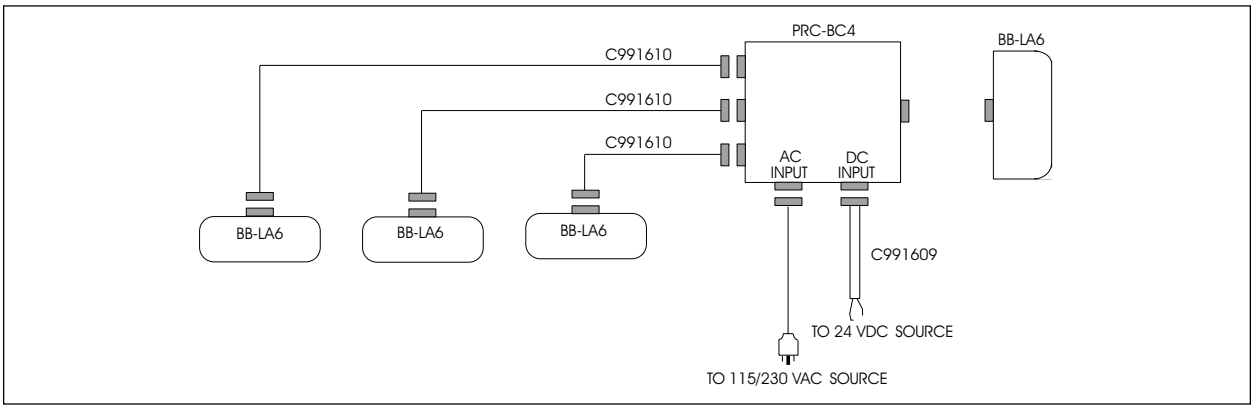

PRC-BC4 charging multiple batteries directly.

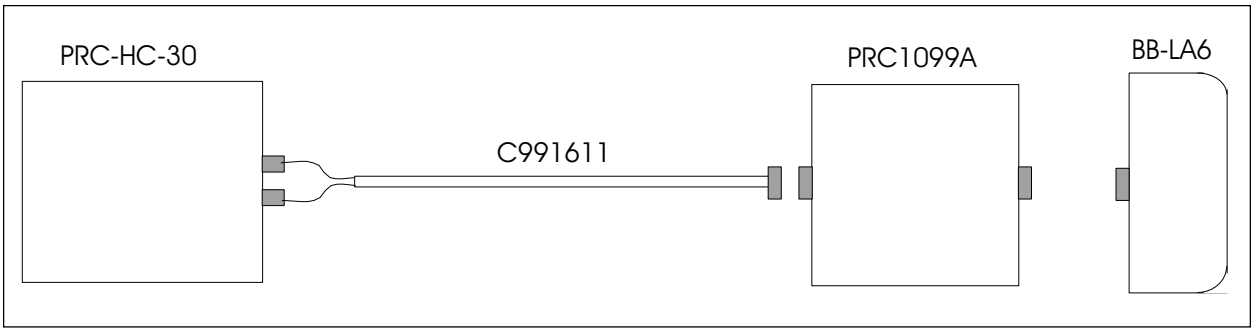

PRC-HC-30 charging battery attached to PRC1099A.

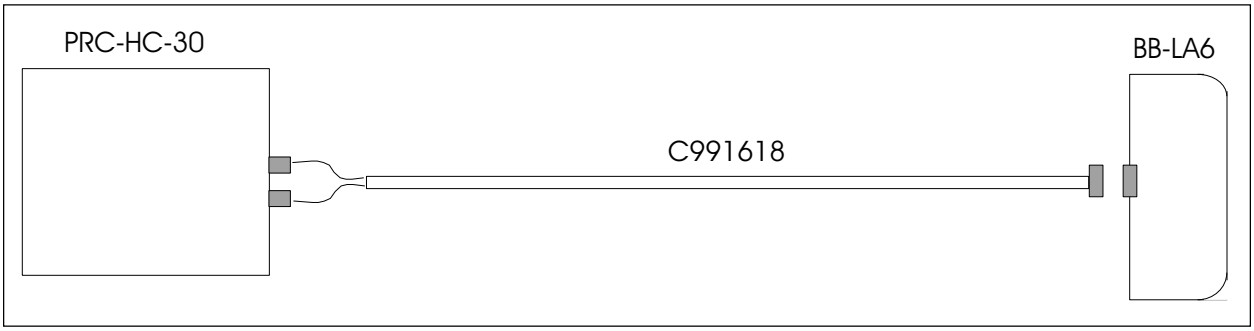

PRC-HC-30 charging battery directly.

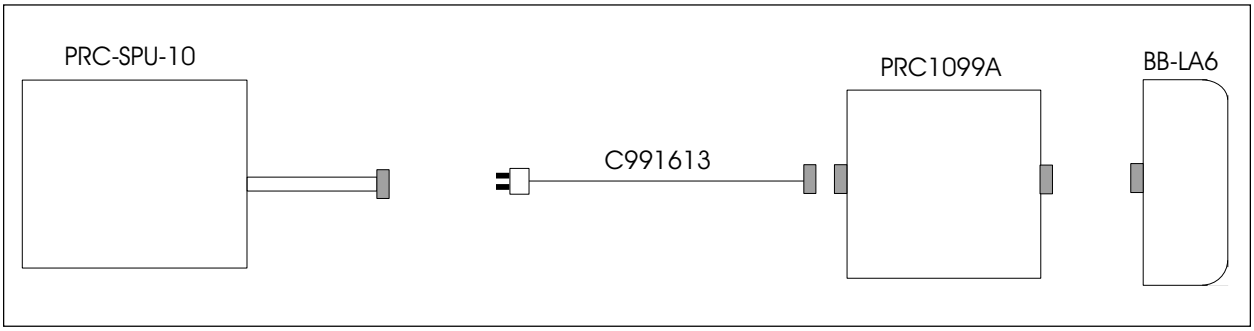

PRC-SPU-10 charging battery attached to PRC1099A.

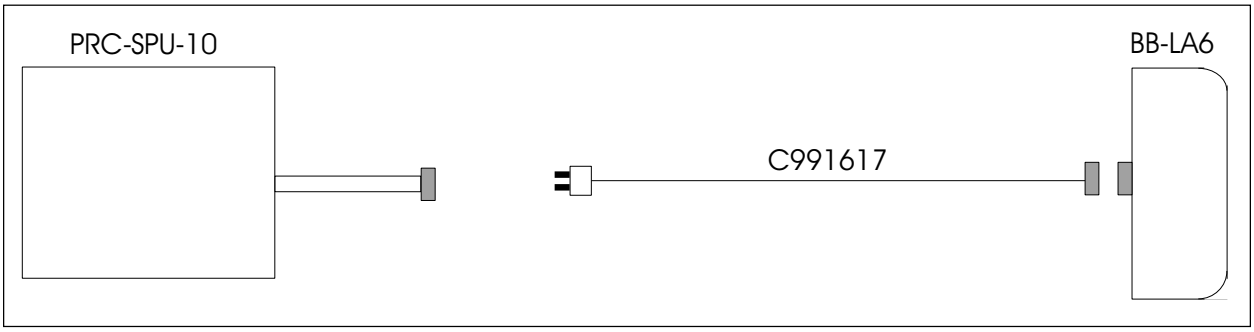

PRC-SPU-10 charging battery directly.

PRC1099A 1.6-30 MHz VEHICULAR SYSTEM

Various mobile configurations are available using the PRC1099A as the core. Both +12 Vdc and +24 Vdc vehicles can be accommodated. A simple "building block" approach allows the user to configure a system for 5W, 20W, 100W or 400W RF power output. Shock mounts are available for all equipment, and installation is possible in a variety of vehicles. The following typical mobile configurations are illustrated in detail later in this section.

PRC1099A System Descriptions	5/20 W	100 W	400 W	+12 Vdc	+24 Vdc	Data Port	Remote Control
24 Vdc, 20W, Mobile System	✓				✓		
24 Vdc, 20W, Mobile System with Manpack Accessories	✓				✓		
24 Vdc, 100W, Mobile System		✓			✓		
24 Vdc, 400W, Mobile System			✓		✓		
12 Vdc, 20W, Mobile System	✓			✓			
12 Vdc, 20W, Mobile System with Manpack Accessories	✓			✓			
12 Vdc, 100W, Mobile System		✓		✓			
24 Vdc, 20W, Mobile System with Remote Control	✓				✓	✓	✓
24 Vdc, 100W, Mobile system with Remote Control		✓			✓	✓	✓
12 Vdc, 20W, Mobile System with Remote Control	✓			✓		✓	✓
12 Vdc, 100W, Mobile System with Remote Control		✓		✓		✓	✓
24 Vdc, 20W, Voice and Data Mobile System	✓				✓	✓	
12 Vdc, 20W Voice and Data Mobile System	✓			✓		✓	

Vehicular Adapters for the PRC1099A

MT-1099A-12
Vehicle adapter with integral shock mount for installation of PRC1099A into 12 Vdc vehicles. Unit provides power conditioning and surge/reverse polarity protection plus loudspeaker audio and interface to accessory RA100 power amplifier. Dimensions identical to U.S. standard MT-1029/VRC vehicle mount. Order C991580 power cable and C991949 control cable separately.

MT-1099A-24
Vehicle adapter with integral shock mount for installation of PRC1099A into 24 Vdc vehicles. Unit provides power conditioning and surge/reverse polarity protection plus loudspeaker audio and interface to accessory RA100 power amplifier. Has internal 24/12 Vdc converter which supplies radio input power. Dimensions identical to U.S. standard MT-1029/VRC vehicle mount. Order C991580 power cable and C991949 control cable separately.

MT1099E-24
Vehicle adapter with integral shock mount for installation of PRC1099A into 24 Vdc vehicles. Unit has power conditioning, surge/reverse polarity protection, and under/over voltage protection. Has internal 24/12 Vdc converter to power radio, loudspeaker audio and RA100 interface. Has provision for connection of external data device (RS232 port). Must be used with PRC1099-ECU for extended control of transceiver to provide volume, PTT, and channel change capability. Dimensions identical to U.S. standard MT-1029/VRC vehicle mount. Order C991580 power cable and C991949 control cable separately.

RA100-MM
Bracket for mounting RA100 to MT1099-series of mounts.

RAT1000-SM
Shock mount for RAT1000 tuner.

RT5200SM
Shock mount for RT5200 and RT5300 modems.

UNIV-SM
Universal shock mount. Used for RA400 RF booster amplifier in 400W mobile configurations.

Amplifiers for the PRC1099A

RA100-12
100W RF power amplifier 1.6-30 MHz. Ruggedized package compatible with 1099A and 1099E-series vehicle adapter mounts and PRC1099A manpack transceiver. Amplifier operates from nominal 12 Vdc power source. Order C991575 RF cable and C991585 control cable separately.

RA100-24
100W RF power amplifier 1.6-30 MHz. Identical to the RA100-12, with additional 24 Vdc power source. Order C991575 RF cable and C991585 control cable separately.

RA400-99
400W RF power amplifier. 1.6-30 MHz medium power tactical amplifier for PRC1099A manpack transceiver. +28 Vdc primary power. Fully immersible. Order C991645 RF cable and C992095 control cable separately.

Vehicular Antennas for the PRC1099A

AAW
Whip adapter and feedwire for direct connection of PRC1099A to RA-MAS, MAR-12, and MAR-16 antennas. Not required when external tuner is used.

MAR-12
Mobile antenna system. Identical to the MAR-16 except consists of three sections. 3.6m (11.8 ft.) tall. Requires antenna tuner.

MAR-16
Mobile antenna system. Four section, heavy-duty fiberglass military whip with flexible spring mobile base and mobile mounting bracket. Can be tied down horizontally to support NVIS communications. 4.8m (16 ft.) tall. Requires antenna tuner.

MAR-16T
Identical to MAR-16 with tilt whip adapter on flexible spring base. Allows locking antenna into four different positions.

RA-MAS
Mobile antenna system. Four section, heavy-duty fiberglass military whip with rigid mobile base and mobile mounting bracket. 4.8m (16 ft.) tall. Requires an antenna tuner.

Base and Deployable Antennas for the PRC1099A

ABB100AN
Broadband folded loop dipole 2-30 MHz, 43.3m (142 ft.) long, 150W power handling. Optimized for 2-10 MHz performance. Supplied with 30m RG213/U coaxial cable feedline and type "N" connector. For permanent and semipermanent applications (requires N-type to BNC adapter for direct connection to radio; mast required).

ABB100BN
Broadband folded loop dipole 2-30 MHz. Short model 34.1m (112 ft.) long, 150W power handling. Supplied with 30m RG213/U coaxial cable feedline and type "N" connector. For permanent and semipermanent applications (requires N-type to BNC adapter for direct connection to radio; mast required).

AMX
Portable antenna mast kit for ABB100-series antennas. Includes 14.7m of mast sections, guy rings, dacron rope guys, guy stakes, mast base, raising halyard rope and pulley. Supplied in canvas carrying bag with guy hammer.

NVISKIT
Transportable NVIS antenna kit consisting of AS-2259/GR NVIS antenna and ground base with a thumb screw connector. Requires antenna tuner. Order cable C992169 when used with the PRC1099A/AAW configuration. Order cable C992168 when used with RAT7000B antenna tuner.

RA-PAS
Fixed station antenna. Eight section, heavy-duty fiberglass military whip. Uses flange mounting base with side feed. 9.6m (31.5 ft.) tall. Requires antenna tuner.

Vehicular Antenna Tuners for the PRC1099A

RAT1000
Automatic antenna tuner in ruggedized, immersible case, 1000W (3-30 MHz) for vehicular or marine installations, (2-30 MHz) for fixed installations. +28 Vdc operation. Provides automatic high-speed digital tuning on receipt of actuation signal from transceiver. Operates with most whip and long-wire antennas to 50m in length. Includes 10 channels for scanning or silent tuning applications. Supplied with C991620 0.5m antenna lead.

RAT7000B
150W automatic digital antenna tuner used with RA100 amplifiers for mobile, marine, fixed and portable installations using whip or long-wire antennas. Supplied with C991620 0.5m antenna lead and mobile mount. Order C992301 control cable and C991505 RF cable separately.

Vehicular Control and Audio Accessories for the PRC1099A

LS-R
External loudspeaker for monitoring of the PRC1099A.

PRC1099-ECU
Extended control unit for PRC1099A when used in MT1099E vehicular configuration. Provides volume, PTT, and channel change capability. Order control cable 764001 separately.

Note: 764001 is standard field wire (2-conductor). The length must be designated in the order.

Mobile/Fixed Power Accessories for the PRC1099A

The following are alternative power sources for the PRC1099A in mobile/fixed configurations.

C991659
Cable allows charging of two BB-series batteries from a 12 Vdc vehicle charging system.

PRC-CA12V
Power cable allows operation of radio from 12 Vdc source. Allows charging of lead-calcium battery pack on radio direct from 12 Vdc vehicle charging system. No lithium or dry-cell battery charging.

RUPS100-12
12 Vdc power supply for 12V mounts with PRC1099A transceiver and optional RA100-12 amplifier. Order C991614 power cable separately. Specify 115 or 230 VAC when ordering.

UPF7000-28
28 Vdc switching power supply for 24V mounts with PRC1099A transceiver and optional RA100-24 amplifier. Order C991614 power cable separately. 85-265 VAC input, 47-63 Hz.

UPS100-28
28 Vdc power supply for 24V mounts with PRC1099A transceiver and optional RA100-24 amplifier. Order C991614 power cable separately. Specify 115 or 230 VAC when ordering.

UPS500
28 Vdc power supply for RA400-99 and PRC1099A configuration. Order C991557 dc power cable separately. Specify 115 or 230 VAC when ordering.

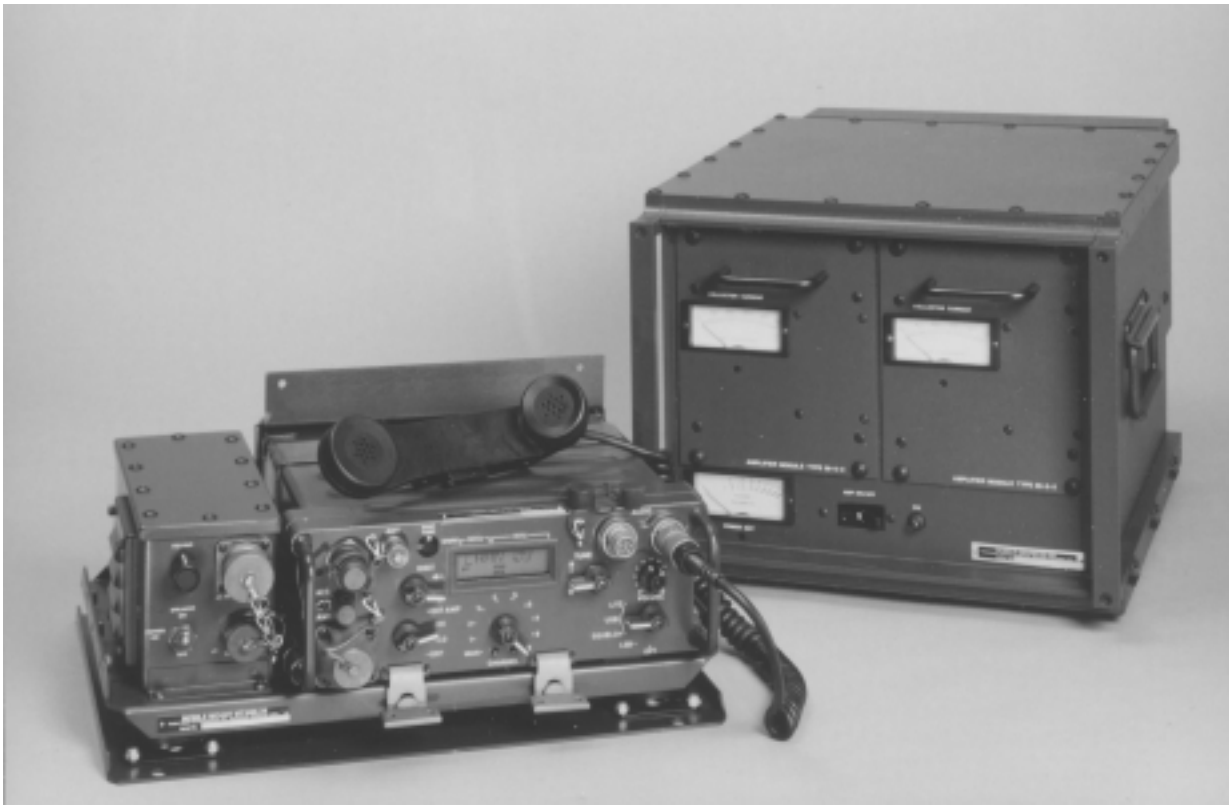

24 Vdc, 20W, Mobile System

Item	Quantity Supplied	DWC P/N	Description
1	1	PRC1099A	Transceiver HF SSB, 20W, 1.6-30 MHz.
2	1	RA-MAS	Antenna, whip, 4.8m (16 ft.), fiberglass with mobile mount.
3	1	AAW	Adapter, whip antenna, includes C992102 antenna lead-in wire.
4	1	MT-1099A-24	Mount, vehicular, 24 Vdc, with loudspeaker.
5	1	MHS	Handset, military style H-189/U-type.
6	1	C991580	MT-1099A-24 to battery, 24 Vdc power cable.
7	1	C991949	PRC1099A to MT-1099A-24, control and power cable.
ALE Option			
Add:	1	1099ALE	Internal FED-STD-1045A ALE module.

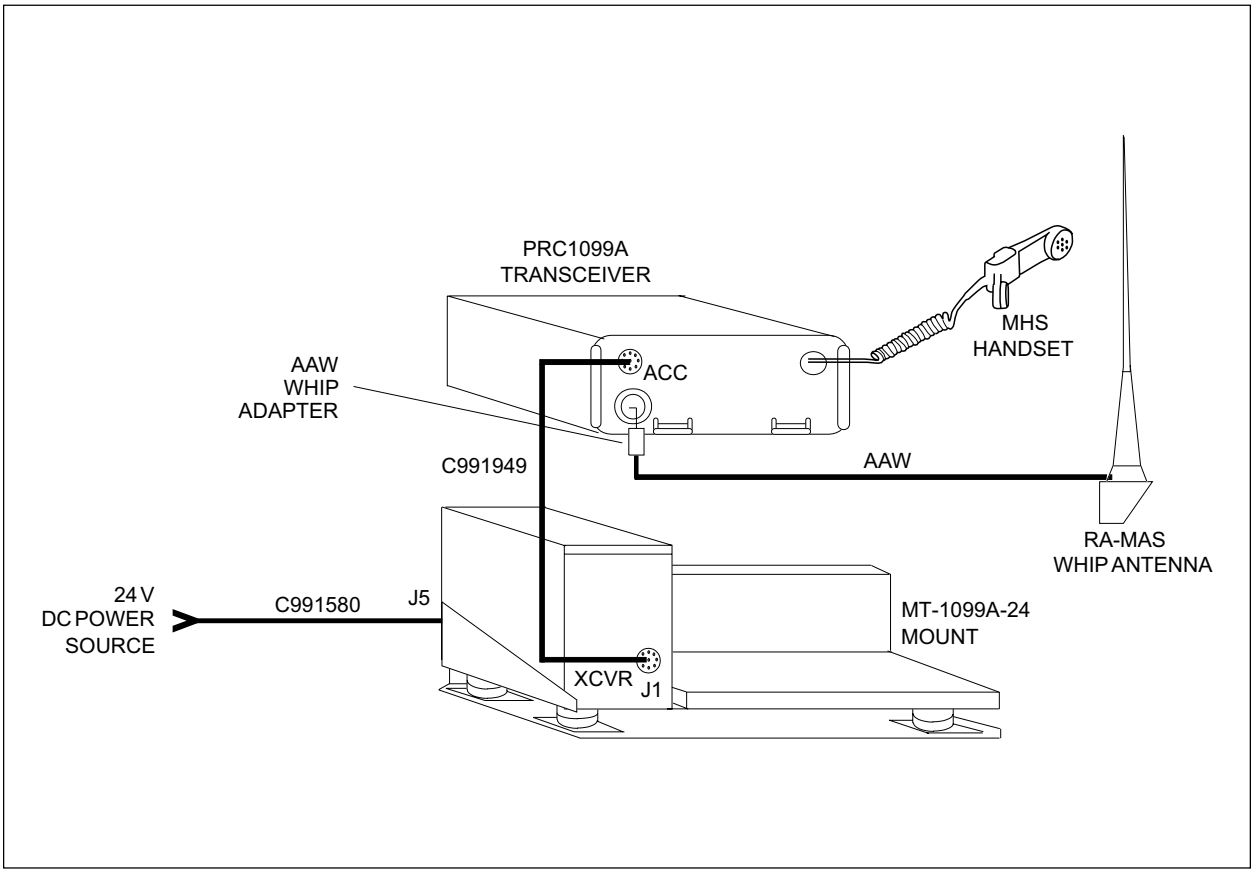

24 Vdc, 20W, Mobile System with Manpack Accessories

Item	Quantity Supplied	DWC P/N	Description
1	1	PRC1099A	Transceiver HF SSB, 20W, 1.6-30 MHz.
2	1	RA-MAS	Antenna, whip, 4.8m (16 ft.), fiberglass with mobile mount.
3	1	AT-271A/U	Antenna, 3m (10 ft.) tactical whip, comes with AB-591/U antenna base.
4	1	AAW	Adapter, whip antenna, includes C992102 antenna lead-in wire.
5	1	MT-1099A-24	Mount, vehicular, 24 Vdc, with loudspeaker.
6	1	LC-2	Tubular, lightweight, backpack carrying frame.
7	1	MHS	Handset, military style H-189/U-type.
8	1	C991580	MT-1099A-24 to battery, 24 Vdc power cable.
9	1	C991949	PRC1099A to MT-1099A-24, control and power cable.
ALE Option			
Add:	1	1099ALE	Internal FED-STD-1045A ALE module.

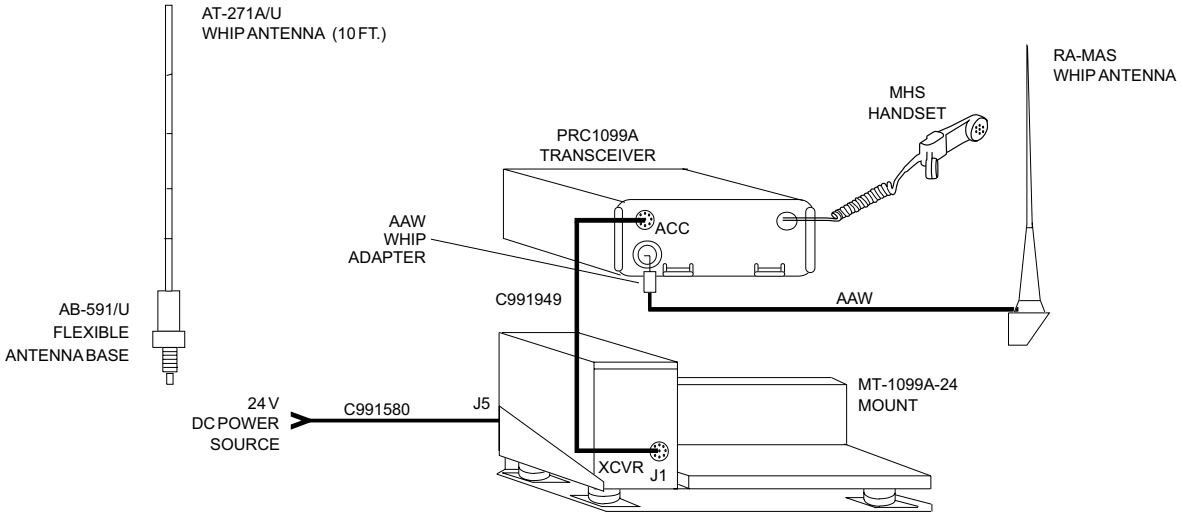

24 Vdc, 100W, Mobile System

Item	Quantity Supplied	DWC P/N	Description
1	1	PRC1099A	Transceiver HF SSB, 20W, 1.6-30 MHz.
2	1	RA100-24	Amplifier, linear, HF power, 100W, 1.6-30 MHz, 24 Vdc.
3	1	RAT7000B	Antenna tuner, automatic, 150W. Includes C991620 antenna lead.
4	1	RA-MAS	Antenna, whip, 4.8m (16 ft.), fiberglass with mobile mount.
5	1	RA100-MM	Mounting bracket, RA100-24.
6	1	MT-1099A-24	Mount, vehicular, 24 Vdc, with loudspeaker.
7	1	MHS	Handset, military style H-189/U-type.
8	1	C991505	RA100-24 to RAT7000B, RF cable.
9	1	C991575	PRC1099A to RA100-24, RF cable.
10	1	C991580	MT-1099A-24 to battery , 24 Vdc power cable.
11	1	C991585	MT-1099A-24 to RA100-24, amplifier control cable.
12	1	C991588	MT-1099A-24 to RA100-24, 24 Vdc power cable.
13	1	C991949	PRC1099A to MT-1099A-24, radio control and power cable.
14	1	C992301	MT-1099A-24 to RAT7000B, tuner control cable.
ALE Option			
Add:	1	1099ALE	Internal FED-STD-1045A ALE module.

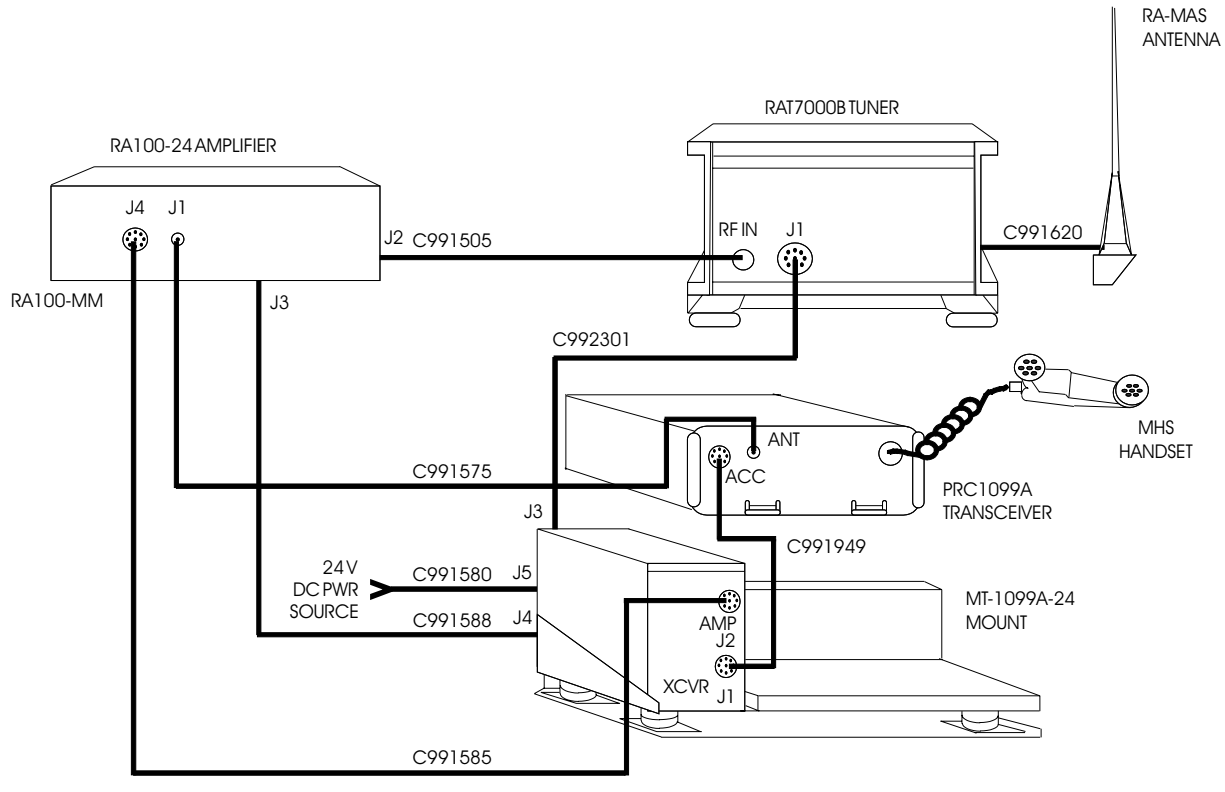

24 Vdc, 400W, Mobile System

Item	Quantity Supplied	DWC P/N	Description
1	1	PRC1099A	Transceiver HF SSB, 20W, 1.6-30 MHz.
2	1	RA400-99	Amplifier, linear, HF power, 400W, 1.6-30 MHz, 24 Vdc.
3	1	RAT1000	Antenna tuner, automatic digital, 1000W. Includes C991620 antenna lead.
4	1	RA-MAS	Antenna, whip, 4.8m (16 ft.), fiberglass with mobile mount.
5	1	MT-1099A-24	Mount, vehicular, 24 Vdc, with loudspeaker.
6	1	UNIV-SM	Mount, shock, RA400-99.
7	1	RAT1000-SM	Shock Mount for RAT1000.
8	1	MHS	Handset, military style H-189/U-type.
9	1	C991505	RA400-99 to RAT1000, RF cable.
10	1	C991558	RA400-99 to battery, 24 Vdc power cable.
11	1	C991580	MT-1099A-24 to battery, 24 Vdc power cable.
12	1	C991614	UPS-series, power cable.
13	1	C991645	PRC1099A to RA400-99, RF cable.
14	1	C991949	MT-1099A-24 to PRC1099A, 24 Vdc power cable.
15	1	C992003	MT-1099A-24 to RAT1000, control cable.
16	1	C992095	MT-1099A-24 to RA400-99, control cable.
ALE Option			
Add:	1	1099ALE	Internal FED-STD-1045A ALE module.

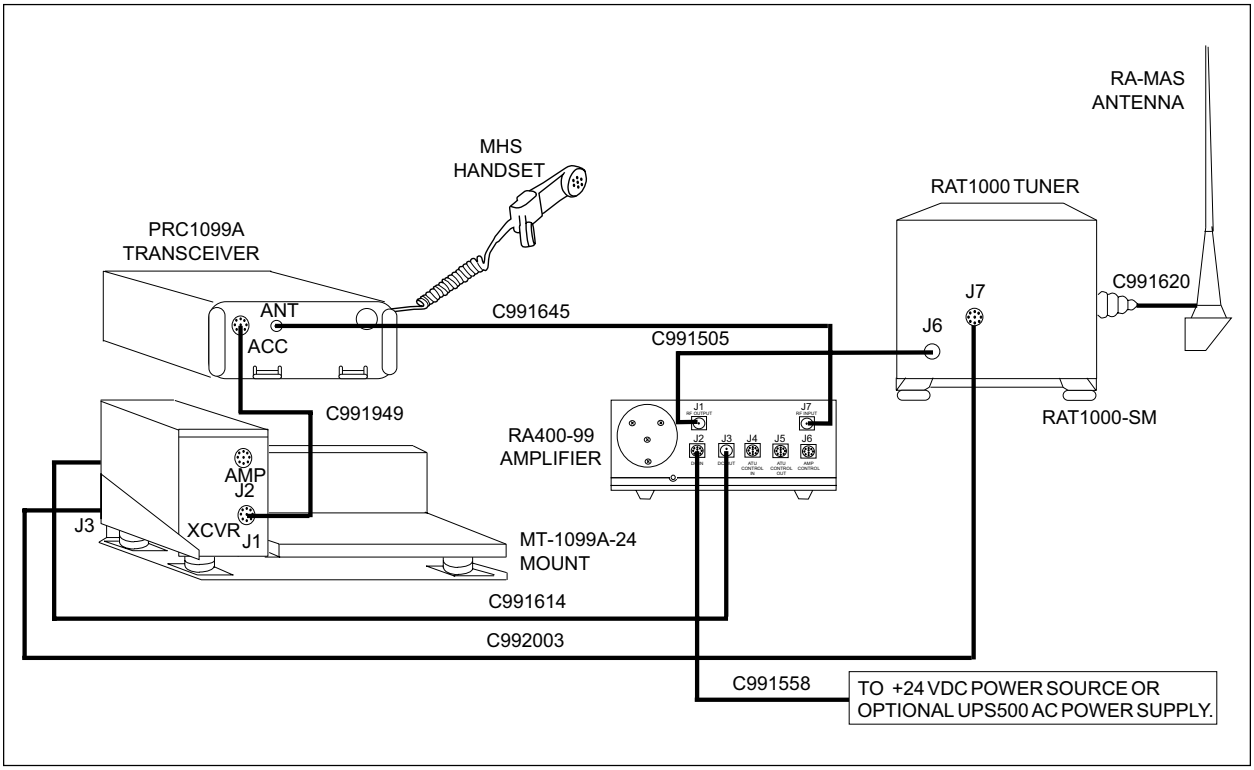

12 Vdc, 20W, Mobile System

Item	Quantity Supplied	DWC P/N	Description
1	1	PRC1099A	Transceiver HF SSB, 20W, 1.6-30 MHz.
2	1	RA-MAS	Antenna, whip, 4.8m (16 ft.), fiberglass with mobile mount.
3	1	AAW	Adapter, whip antenna, includes C992102 antenna lead-in wire.
4	1	MT-1099A-12	Mount, vehicular, 12 Vdc, with loudspeaker.
5	1	MHS	Handset, military style H-189/U-type.
6	1	C991580	MT-1099A-12 to battery, 12 Vdc power cable.
7	1	C991949	PRC1099A to MT-1099A-12, control and power cable.
ALE Option			
Add:	1	1099ALE	Internal FED-STD-1045A ALE module.

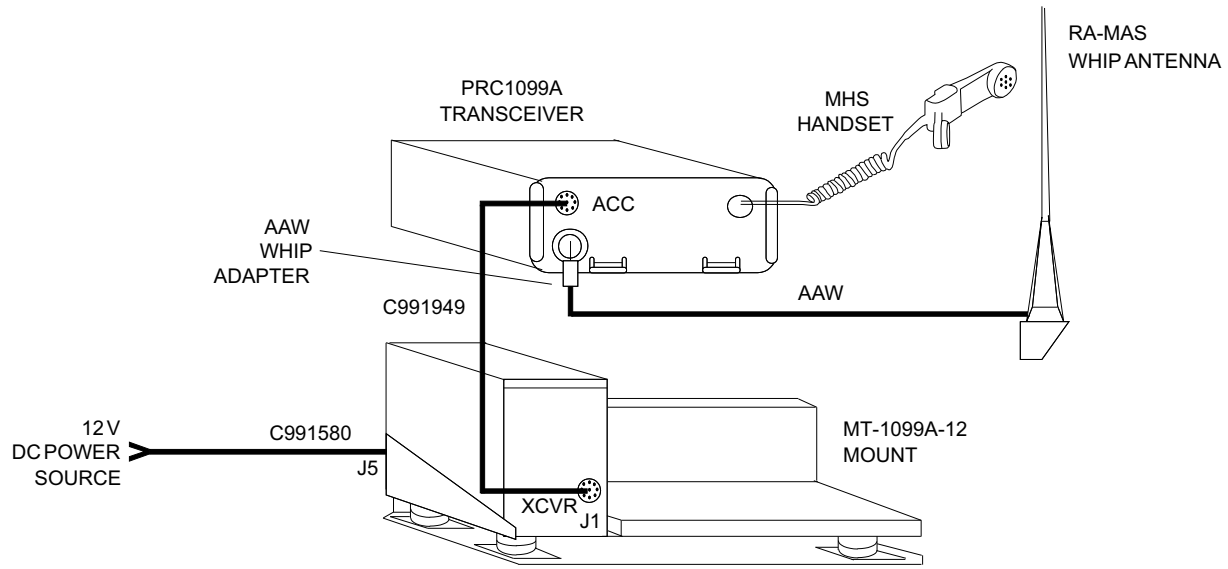

12 Vdc, 20W, Mobile System with Manpack Accessories

Item	Quantity Supplied	DWC P/N	Description
1	1	PRC1099A	Transceiver HF SSB, 20W, 1.6-30 MHz.
2	1	RA-MAS	Antenna, whip, 4.8m (16 ft.), fiberglass with mobile mount.
3	1	AT-271A/U	Antenna, 3m (10 ft.) tactical whip, comes with AB-591/U antenna base.
4	1	AAW	Adapter, whip antenna, includes C992102 antenna lead-in wire.
5	1	MT-1099A-12	Mount, vehicular, 12 Vdc, with loudspeaker.
6	1	LC-2	Tubular, lightweight, backpack carrying frame.
7	1	MHS	Handset, military style H-189/U-type.
8	1	C991580	MT-1099A-12 to battery, 12 Vdc power cable.
9	1	C991949	PRC1099A to MT-1099A-12, control and power cable.
ALE Option			
Add:	1	1099ALE	Internal FED-STD-1045A ALE module.

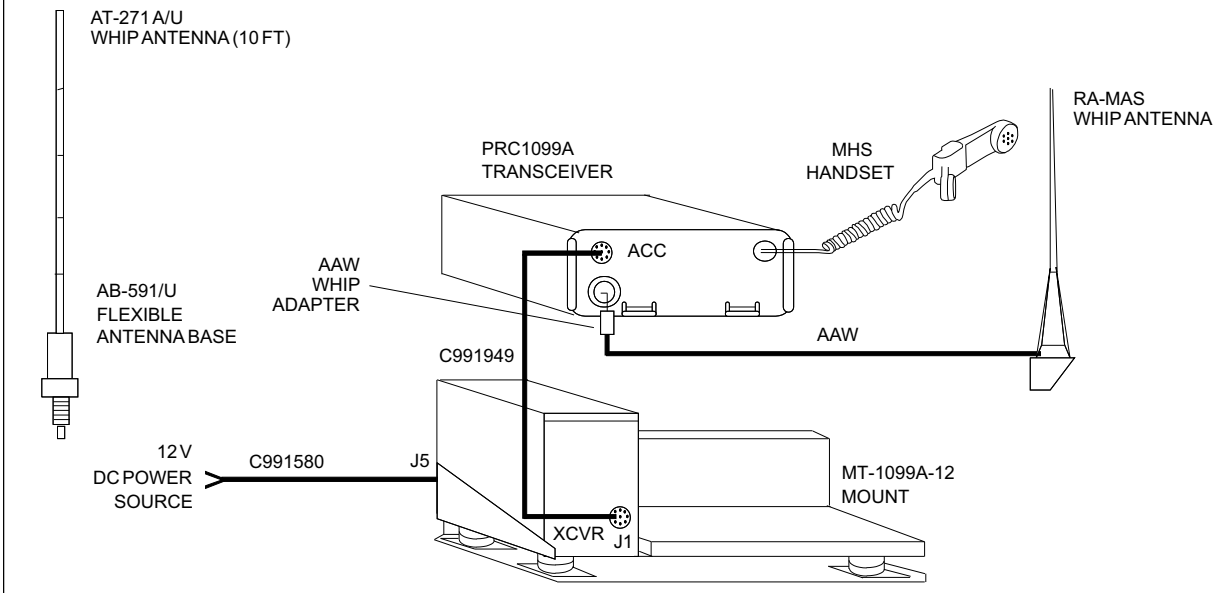

12 Vdc, 100W, Mobile System

Item	Quantity Supplied	DWC P/N	Description
1	1	PRC1099A	Transceiver HF SSB, 20W, 1.6-30 MHz.
2	1	RAT7000B	Antenna tuner, automatic, 150W. Includes C991620 antenna lead.
3	1	RA100-12	Amplifier, linear, HF power, 100W, 1.6-30 MHz, 12 Vdc.
4	1	RA-MAS	Antenna, whip, 4.8m (16 ft.), fiberglass with mobile mount.
5	1	MT-1099A-12	Mount, vehicular, 12 Vdc, with loudspeaker.
6	1	RA100-MM	Mounting bracket, RA100-12.
7	1	MHS	Handset, military style H-189/U-type.
8	1	C991505	RA100-12 to RAT7000B, RF cable.
9	1	C991575	PRC1099A to RA100-12, RF cable.
10	1	C991580	MT-1099A-12 to battery, 12 Vdc power cable.
11	1	C991585	MT-1099A-12 to RA100-12, amplifier control cable.
12	1	C991588	MT-1099A-12 to RA100-12, 12 Vdc power cable.
13	1	C991949	PRC1099A to MT-1099A-12, radio control and power cable.
14	1	C992301	MT-1099A-12 to RAT7000B, tuner control cable.
ALE Option			
Add:	1	1099ALE	Internal FED-STD-1045A ALE module.

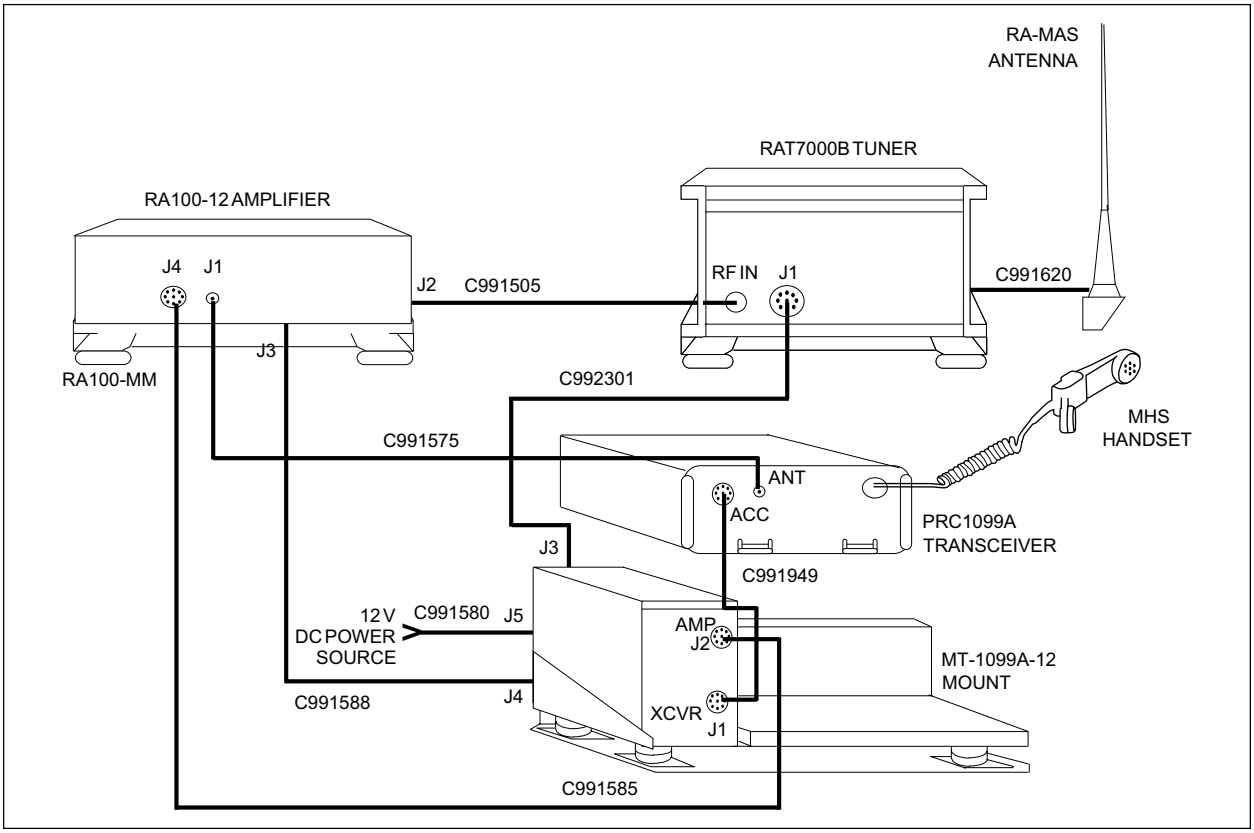

24 Vdc, 20W, Mobile System with Remote Control

Item	Quantity Supplied	DWC P/N	Description
1	1	PRC1099A	Transceiver HF SSB, 20W, 1.6-30 MHz.
2	1	PRC1099-ECU	Remote control unit for PRC1099A.
3	1	RA-MAS	Antenna, whip, 4.8m (16 ft.), fiberglass with mobile mount.
4	1	AAW	Adapter, whip antenna, includes C992102 antenna lead-in wire.
5	1	MT1099E-24	Mount, vehicular, 24 Vdc, with loudspeaker.
6	1	MHS	Handset, military style H-189/U-type.
7	1	764001	PRC1099-ECU to MT1099E-24, control and power cable, specify length.
8	1	C991580	MT-1099A-24 to battery, 24 Vdc power cable.
9	1	C991949	PRC1099A to MT1099E-24, control and power cable.
ALE Option			
Add:	1	1099ALE	Internal FED-STD-1045A ALE module.

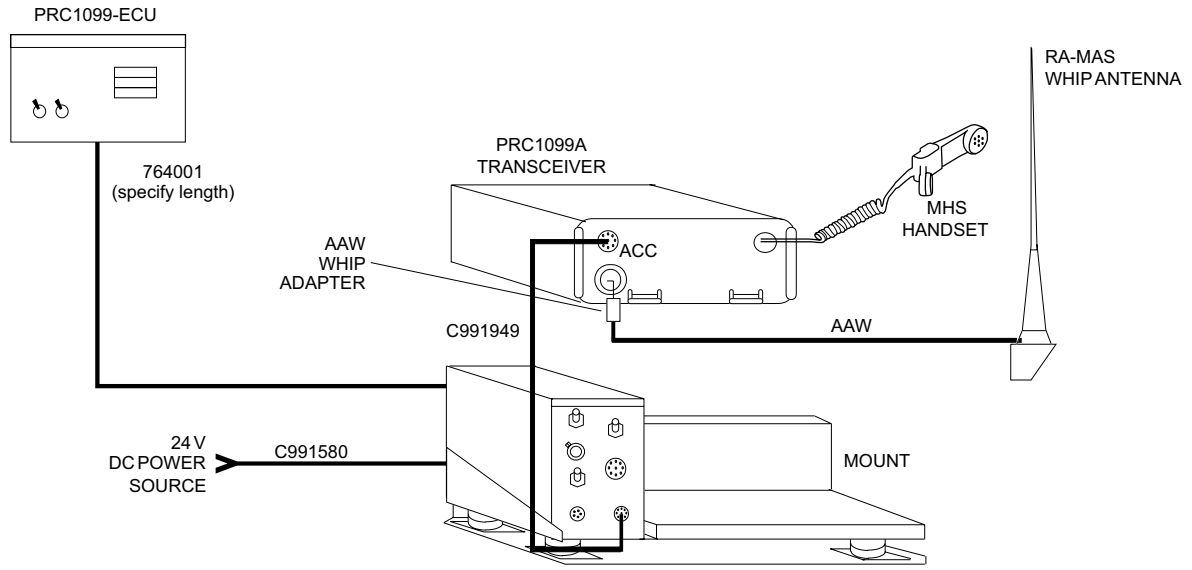

24 Vdc, 100W, Mobile System with Remote Control

Item	Quantity Supplied	DWC P/N	Description
1	1	PRC1099A	Transceiver HF SSB, 20W, 1.6-30 MHz.
2	1	PRC1099-ECU	Remote control unit for PRC1099A.
3	1	RAT7000B	Antenna tuner, automatic, 150W. Includes C991620 antenna lead.
4	1	RA-MAS	Antenna, whip, 4.8m (16 ft.), fiberglass with mobile mount.
5	1	RA100-24	Amplifier, linear, HF power, 100W, 1.6-30 MHz, 24 Vdc.
6	1	MT1099E-24	Mount, vehicular, 24 Vdc, with loudspeaker.
7	1	RA100-MM	Mounting bracket, RA100-24.
8	1	MHS	Handset, military style H-189/U-type.
9	1	764001	PRC1099-ECU to MT1099E-24, control and power 2-conductor field wire, specify length.
10	1	C991505	RA100-24 to RAT7000B, RF cable.
11	1	C991575	PRC1099A to RA100-24, RF cable.
12	1	C991580	MT1099E-24 to battery, 24 Vdc power cable.
13	1	C991585	MT1099E-24 to RA100-24, amplifier control cable.
14	1	C991588	MT1099E-24 to RA100-24, 24 Vdc power cable.
15	1	C991949	PRC1099A to MT1099E-24, radio control and power cable.
16	1	C992301	MT-1099A to RAT7000B, tuner control cable.
ALE Option			
Add:	1	1099ALE	Internal FED-STD-1045A ALE module.

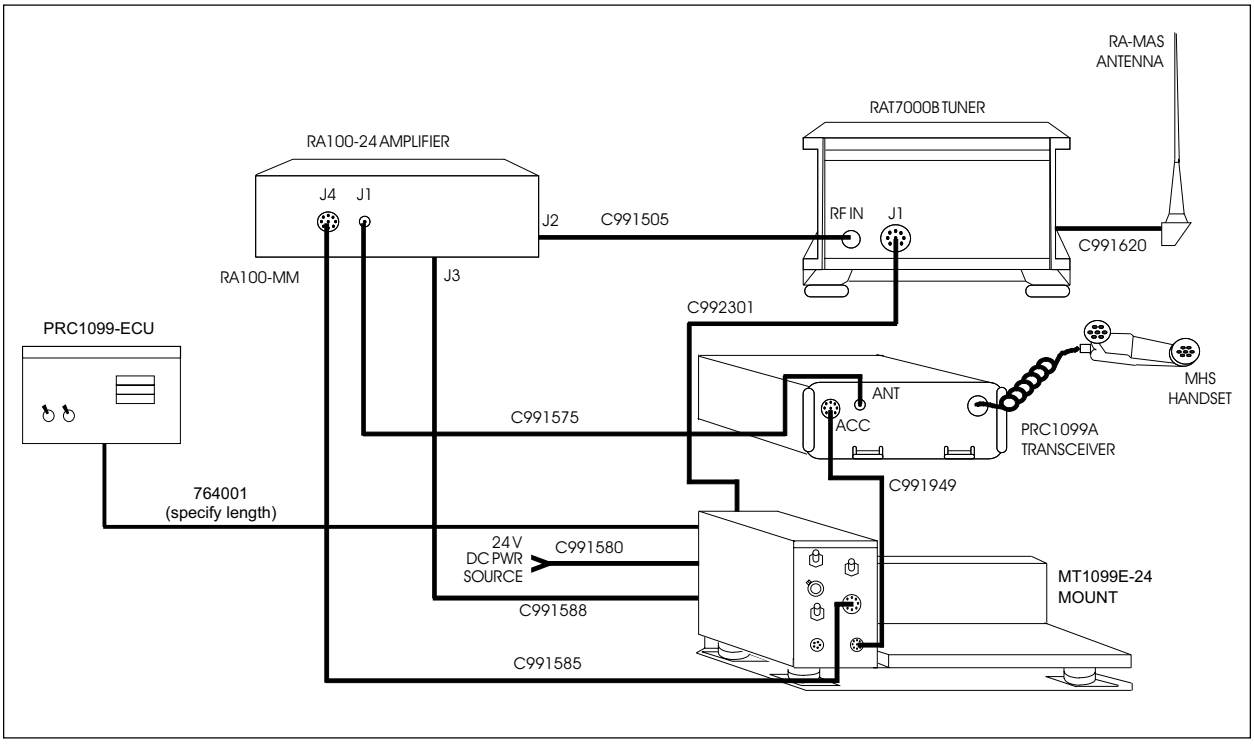

12 Vdc, 20W, Mobile System with Remote Control

Item	Quantity Supplied	DWC P/N	Description
1	1	PRC1099A	Transceiver HF SSB, 20W, 1.6-30 MHz.
2	1	PRC1099-ECU	Remote control unit for PRC1099A.
3	1	RA-MAS	Antenna, whip, 4.8m (16 ft.), fiberglass with mobile mount.
4	1	AAW	Adapter, whip antenna, includes C992102 antenna lead-in wire.
5	1	MT1099E-12	Mount, vehicular, 12 Vdc, with loudspeaker.
6	1	MHS	Handset, military style H-189/U-type.
7	1	764001	PRC1099-ECU to MT1099E-24, control and power 2-conductor field wire, specify length.
8	1	C991580	MT1099E-12 to battery, 12 Vdc power cable.
9	1	C991949	PRC1099A to MT1099E-12, control and power cable.
ALE Option			
Add:	1	1099ALE	Internal FED-STD-1045A ALE module.

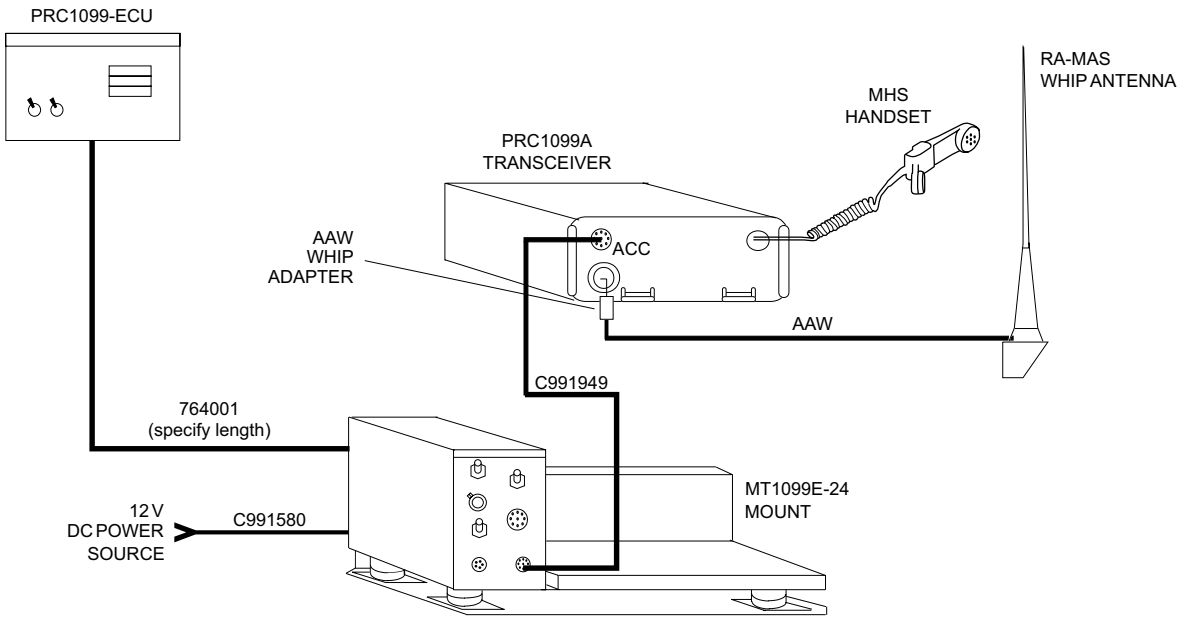

12 Vdc, 100W, Mobile System with Remote Control

Item	Quantity Supplied	DWC P/N	Description
1	1	PRC1099A	Transceiver HF SSB, 20W, 1.6-30 MHz.
2	1	PRC1099-ECU	Remote control unit for PRC1099A.
3	1	RAT7000B	Antenna tuner, automatic, 150W. Includes C991620 antenna lead.
4	1	RA100-12	Amplifier, linear, HF power, 100W, 1.6-30 MHz, 12 Vdc.
5	1	RA-MAS	Antenna, whip, 4.8m (16 ft.), fiberglass with mobile mount.
6	1	MT1099E-12	Mount, vehicular, 12 Vdc, with loudspeaker.
7	1	RA100-MM	Mounting bracket, RA100-12.
8	1	MHS	Handset, military style H-189/U-type.
9	1	764001	PRC1099-ECU to MT1099E-24, control and power 2-conductor field wire, specify length.
10	1	C991505	RA100-12 to RAT7000B, RF cable.
11	1	C991575	PRC1099A to RA100-12, RF cable.
12	1	C991580	MT1099E-12 to battery, 12 Vdc power.
13	1	C991585	MT1099E-12 to RA100-12, amplifier control cable.
14	1	C991588	MT1099E-12 to RA100-12, 12 Vdc power cable.
15	1	C991749	PRC1099-ECU to MT1099E-12, control and power cable.
16	1	C991949	PRC1099A to MT1099E-12, radio control and power cable.
17	1	C992301	MT1099E-12 to RAT7000B, tuner control cable.
ALE Option			
Add:	1	1099ALE	Internal FED-STD-1045A ALE module.

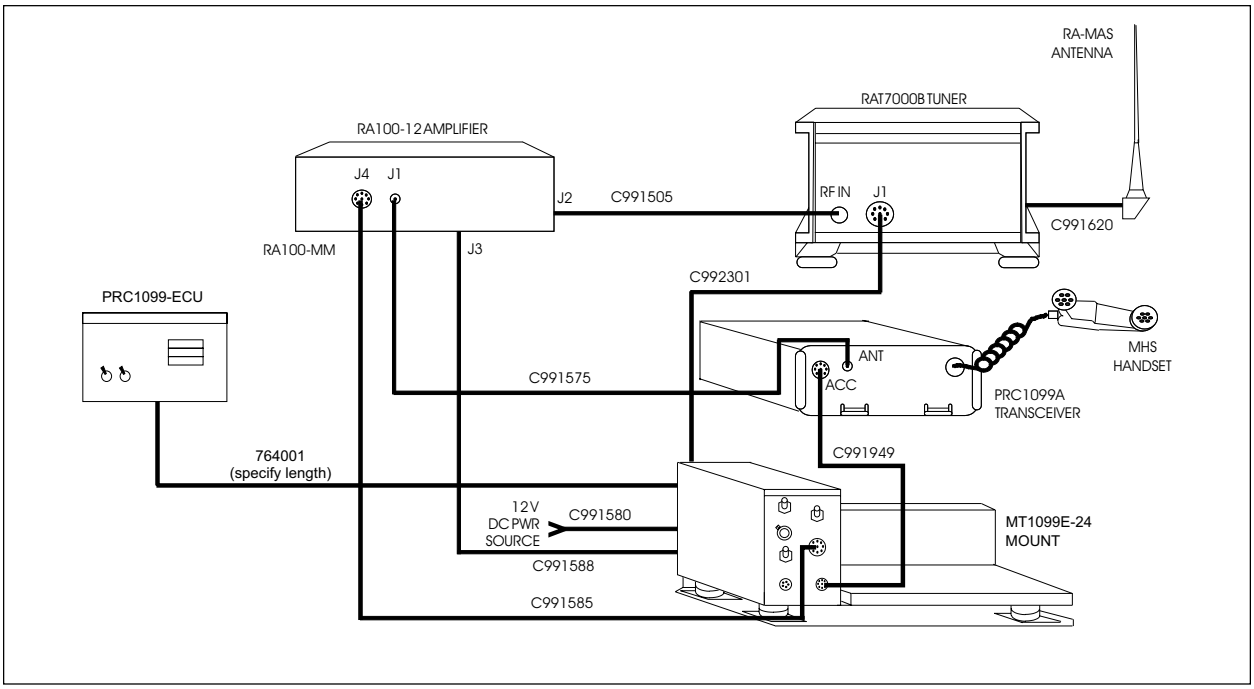

24 Vdc, 20W, Voice and Data Mobile System

Item	Quantity Supplied	DWC P/N	Description
1	1	PRC1099A	Transceiver HF SSB, 20W, 1.6-30 MHz.
2	1	RT5200/5300	Data modem.
3	1	RA-MAS	Antenna, whip, 4.8m (16 ft.), fiberglass with mobile mount.
4	1	AAW	Adapter, whip antenna, includes C992102 antenna lead-in wire.
5	1	MT1099E-24	Mount, vehicular, 24 Vdc, with loudspeaker.
6	1	MHS	Handset, military style H-189/U-type.
7	1	C991580	MT1099E-24 to battery, 24 Vdc power cable.
8	1	C991949	PRC1099A to MT1099E-24, radio control and power cable.
9	1	C992025	MT1099E to RT5200/5300, modem control and power cable.
ALE Option			
Add:	1	1099ALE	Internal FED-STD-1045A ALE module.

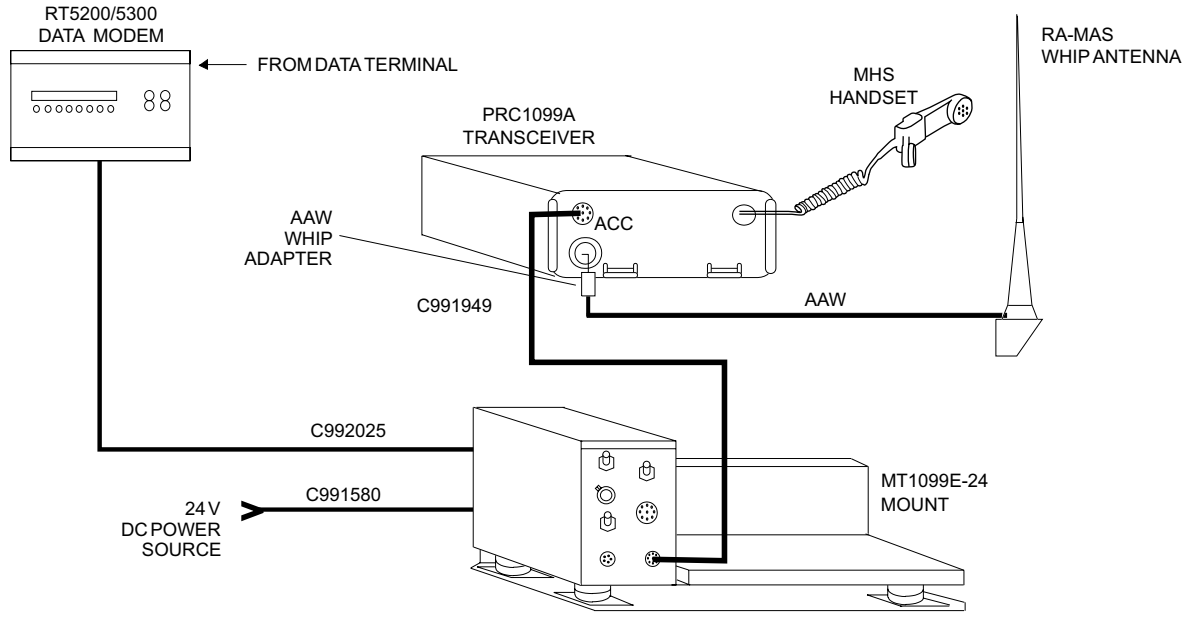

12 Vdc, 20W, Voice and Data Mobile System

Item	Quantity Supplied	DWC P/N	Description
1	1	PRC1099A	Transceiver HF SSB, 20W, 1.6-30 MHz.
2	1	RT5200/5300	Data modem.
3	1	RA-MAS	Antenna, whip, 4.8m (16 ft.), fiberglass with mobile mount.
4	1	AAW	Adapter, whip antenna, includes C992102 antenna lead-in wire.
5	1	MT1099E-12	Mount, vehicular, 12 Vdc, with loudspeaker.
6	1	MHS	Handset, military style H-189/U-type.
7	1	C991580	MT1099E-12 to battery, 12 Vdc power cable.
8	1	C991949	PRC1099A to MT1099E-12, control and power cable.
9	1	C992025	MT1099E-12 to RT5200/5300, modem control and power cable.
ALE Option			
Add:	1	1099ALE	Internal FED-STD-1045A ALE module.

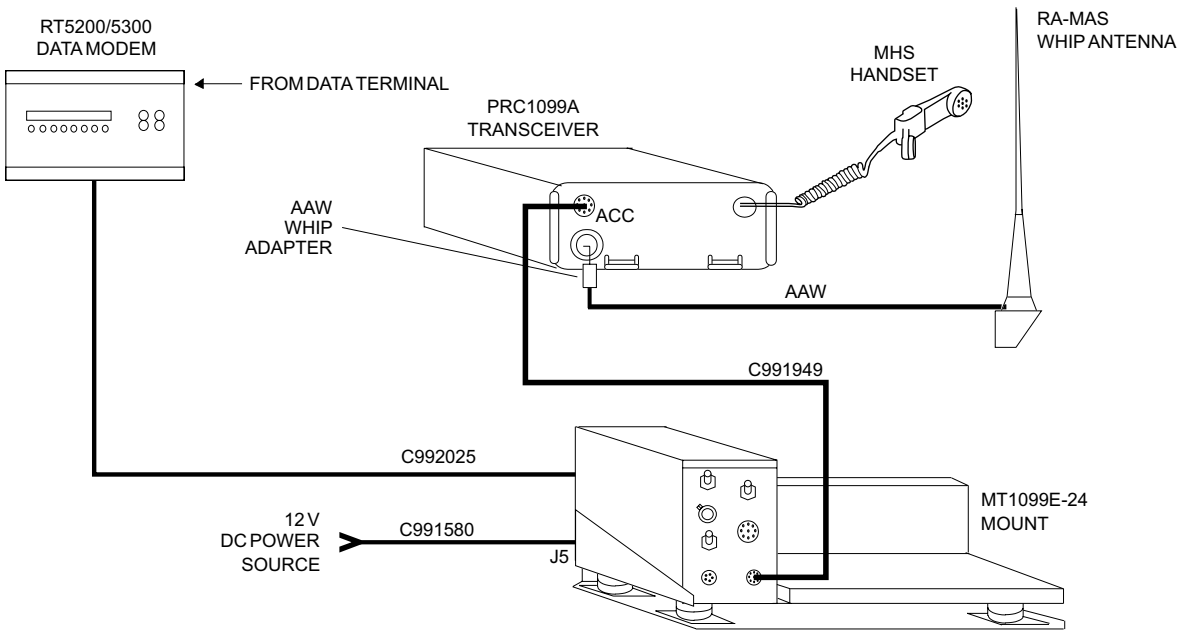

PRC1099A TRANSCEIVER CABLES, SPARES, AND MANUALS

Cables for the PRC1099A

All cables come complete with connectors unless indicated otherwise.

DWC P/N	Description
764001	Field wire, 2 conductor.
C991505	N-type connector, RF, 5m.
C991557	UPS500, dc power, 0.6m.
C991558	RA400, open-ended, dc power, 0.6m.
C991575	PRC1099A-antenna, RF, 0.2m.
C991580	Open-ended, dc power, 3m.
C991585	MT-1099A to RA100, control, 0.5m.
C991588	MT-1099A to RA100, dc power, 0.6m.
C991608	PRC-PS power/control, 1m.
C991609	PRC-PS and PRC-BC4, open-ended, dc power, 3m.
C991610	PRC-BC4 to BB-series, charging, 1m.
C991611	PRC-HC-series, charging, 2m.
C991612	BB-series, adapter, 0.3m.
C991613	PRC-SPU-10, power, 2m.
C991614	UPS100-series, power, 1m.
C991617	PRC-SPU-10, charging, 1m.
C991618	PRC-HC-30 to BB-LA6, charging, 1m.
C991620	Antenna tuner, antenna lead-in, 0.5m.
C991641	MT-1099A to PRC1099A, audio, 1m.
C991645	PRC1099A to RA400-9,9 RF, 0.6m.
C991659	BB-series, open-ended, charging, 3m.
C991668	PRC1099A to RA100, control, 0.5m.
C991749	PRC1099ECU-MT1099E, control.
C991949	Radio to mount, control/power, 0.3m.
C992002	MT-1099A to RA400-99 tuner, control, 0.75m.
C992003	RA400-99 to RAT1000, control, 5m.
C992025	RT5200/5300 to MT1099E, control.
C992095	MT-1099A to RA400-99, control, 0.6m.
C992102	Antenna tuner to antenna, RF, 1.2m.
C992301	MT1099-series mounts to RAT7000B, control.

Note: Standard length of each cable is indicated in cable description. To order nonstandard cable lengths, contact your Datron Representative.

Spares Kits for the PRC1099A

DWC Product P/N	Module Kit (MK)	Module Repair Kit (MRK)	Parts Spares Kit (PSK)
MT-1099A-12	✓	✓	✓
MT-1099A-24	✓	✓	✓
MT1099E-12	✓	✓	✓
MT1099E-24	✓	✓	✓
PRC1099A	✓	✓	✓
PRC1099-ECU	✓	✓	✓
PRC-BC4	✓	✓	✓
PRC-PS	✓	✓	✓
RA100-12	✓	✓	✓
RA100-24	✓	✓	✓
RA400-99	✓	✓	✓
RAT1000	✓	✓	✓
RAT7000B	✓	✓	✓
RUPS100-12			✓
UPS100-28			✓
UPS500			✓

Note: To order an individual spares kit, add the appropriate suffix (i.e., -MK, -MRK, -PSK) to the product part number. For a complete list of Module Kit, Module Repair Kit, and Parts Spares Kit, see the Spares section.

Spare Module Assemblies for the PRC1099A

When ordering spare module assemblies specify module and serial number of equipment.

DWC P/N	Description
009-00101	M1 PC Assembly, PRC1099A
009-00201	M2 PC Assembly, PRC1099A
009-00301	M3 PC Assembly, PRC1099A
009-00501	M5 PC Assembly, PRC1099A
009-00603	M6 PC Assembly, PRC1099A
009-00801	DISPLAY PC Assembly, PRC1099A
009-00901	JUNCTION BD Assembly, PRC1099A
009-10701	M7 PC Assembly, PRC1099A
PRC1099-M4	PA Assembly, PRC1099A
RA100-FILT	FILTER Assembly, RA100
RA100PA-12	PA Assembly, RA100-12
RA100PA-24	PA Assembly, RA100-24
TW100-M8A	Regulator Assembly, MT-1099A-24

Note: For information on spare subassemblies not listed, contact your Datron Representative.

Manuals for the PRC1099A

DWC P/N	Operator (supplied with unit)	Technical (order separately)	Operator/Technical (supplied with unit)
ABB100-MS			✓
ALD-MS			✓
ALD-REM-MS			✓
AMX-MS			✓
MT-1099A-MS			✓
MT1099E-MS			✓
PRC1099A-MS		✓	
PRC1099A-MSOP	✓		
PRC1099-ECU-MS			✓
PRC-BC4-MS			✓
PRC-HC-MS			✓
PRC-PS-MS			✓
PRC-SPU-10-MS			✓
RA100-MS		✓	
RA100-MSOP	✓		
RA400-99-MS		✓	
RA400-99-MSOP	✓		
RAT1000-MS		✓	
RAT1000-MSOP	✓		
RAT7000B-MS			✓
RT5200-MS			✓
RUPS100-12-MS			✓
UPS100-28-MS			✓
UPS500/1000-MS			✓

Note: For a detailed list of Datron documentation, see the Manual section. For system documentation, contact your Datron Representative.

TW7000-SERIES HF TRANSCEIVERS

- 1.6 MHz-30 MHz (receive 100 kHz-30 MHz)
- DSP-Based Voice Processing
- Up to 1000 Memory Channels
- Synthesized 10 Hz Steps
- 125W PEP/100W Average
- BITE Capability
- Multi-Protocol Remote Control Capabilities
- Multi-Mode Capabilities
- Alphanumeric LCD
- Dual ALE Capability

The TW7000-series is a 1.6-30 MHz professional HF transceiver family designed to provide long distance voice and data transmission capability over HF. A complete line of Datron accessories including RF amplifiers, antenna tuners, power supplies, and audio equipment are available to complement the core TW7000 transceivers and form system configurations with RF power levels up to 1000W. High-speed modems, data terminals, and application software packages help configure even the most complex network data system.

All models in the TW7000 family are designed for use in a wide variety of professional applications ranging from single piece rapid-deployment units to complete embassy systems. The RF output power is conservatively rated at 125W, PEP, and 100W, average, in a continuous mode. Full protection is provided against reverse polarity, overvoltage, and antenna mismatch. Automatic BITE capability, with fault detection down to the module level is standard in all TW7000s and allows even unskilled operators to easily repair the radio at the field level.

FED-STD-1045A compatible automatic link establishment (ALE), high-level encryption, DSP-based voice processing, and special STANAG-compliant data filters are included. Other plug-in features that can easily be added to the standard transceiver. A variety of remote control options including extended front panel control; full-function, long-range remote control; and computer control are offered for use with any of the transceivers.

TW7000-Series Transceivers

Supplied with operator manual and listed interface cables. Order technical manual separately.

TW7000
SSB/FSK synthesized 1.6-30 MHz transceiver, (receive 100 kHz-30 MHz), 12 Vdc, 125W PEP/100W average (three programmable levels), USB, LSB, CW, PCS, and AME modes are standard. Simplex and semi-duplex, continuous coverage, 10 Hz steps, and keypad programmable, nonvolatile storage on 256 channels (expandable to 1000). Transmit/receive fast switching for ARQ operation is standard. Comes standard with an RS232 serial interface, factory set to 9600 baud. Complete with antenna tuner interface (100-channel memory included) and multiple group scanning. Includes C991829 dc power cable, antenna connector, and operator manual.

TW7000C
A TW7000 designed for computer control. The standard front panel is replaced with a blank front panel.

TW7000E
A TW7000 designed for extended control use. The standard front panel is replaced with a line driver panel. Used with TW7201E control head for remote operation up to 15m (50 ft.). Order C991830 control cable separately. Standard length is 5m. Includes C991829 dc power cable.

TW7000PP
Same as the TW7000 but includes connection points to allow the TW5830 pre/postselector and TW5830INST installation kit to be added for co-sited station operation.

Note: Use of the TW5830 requires the radio to be a TW7000PP and also requires the use of the TW5830INST installation kit. The TW7000 is not field upgradeable to a TW7000PP.

TW7000RF
A TW7000 designed for long distance remote only use beyond 2 km. The standard front panel is replaced with a blank front panel. An internal modem card (7000RF) is installed. Used with TW7201F for full function FSK remote control. Order control cable separately.

TW7000RI
A TW7000 designed for remote only use up to 2 km. The standard front panel is replaced with a blank front panel. An internal modem card (7000RI) is installed. Used with TW7201I for full function, real time, ISDN remote control. Order control cable separately.

TW7000RX
A TW7000 receiver only, with full features of the TW7000.

TW7000TX
A TW7000 transmitter only, with full features of the TW7000.

Options for the TW7000-Series

7000ACH
Additional channels. Increases operational channels to 1000.

7000ALE
FED-STD-1045A ALE module provides fully compatible system for ALE operations, including high-speed scanning, sounding, link quality analysis, and send/receive orderwire message capability. Provides selective calling as well as “best available frequency” selection. Use external computer running Datron’s 9000RAD software or alphanumeric keypad of radio for orderwire message composition. Custom LCD provides alphanumeric display of message. Includes real time clock option (7000CLK).

7000RCDR
Combines receive and transmit audio and routes them to Accessory #2. Typically used with a continuous recording device to monitor RX and TX communications. It can also be used in a split system, with separate transmitter and receiver.

7000ENCR
Encryption module provides high-level digital encryption of voice. Compatible with the TCC 9000-series. For information on the Key Management system, contact your Datron Representative.

Note: U.S. State Department export license is required for shipment of the 7000ENCR outside of the United States.

7000HS
High-stability TCXO. Provides frequency stability of ±0.1 PPM.

Note: The 7000HS option is recommended for high-speed data use (MIL-110A modem) and for use with ALE (7000ALE).

7000NB
Impulse-type noise blanker. For use in high noise environments.

7000RF
FSK modem assembly for the TW7000 radio and TW7201F remote control.

7000RI
ISDN modem assembly for the TW7000 radio and TW7201I remote control.

7000RS
RS422/423/485 input/output. Configures second serial port to provide data protocol specified by the user for external control of radio via computer. Format choice must be included with order. This option is in addition to the RS232 interface included as a standard feature with the TW7000.

7000TC
Provides all functions of Transcall, Selcall and TransAdapt. Selcall offers digital selective calling. Provides calling of a selected station with automatic answerback and alarm. Selective calling stops scan. Transcall offers automatic path evaluation within selected multiple scan groups (ten channels maximum per scan group is suggested). Establishes contact on "best available frequency" with automatic alarm. An external alarm signal is available for both TC and SC operation. TransAdapt offers automatic path evaluation based on "first acceptable frequency." Compatible with PRC1099A TransAdapt units.

7000VEM
DSP-based speech processing module. Contains sophisticated 2-level noise reduction algorithm used to enhance speech by removing broadband noise from outside the signal envelope, and remove discrete interfering tones that can jam speech processing.

7000WB1
Wide-band/data filter. Provides 300-3300 Hz data filter with tailored group delay; USB/LSB. Recommended for high-speed data use (TW110A). STANAG 4285 compliant.

Transceiver Remote Controls for the TW7000

TW7201E
Extended front-panel control head for the transceiver. Front panel is removed from the radio and remote up to 15m (50 ft.). Used with TW7000E. Order C991830 control cable separately.

TW7201F
Full remote control (FSK). Full function Remote Control Unit (RCU) using FSK signaling format. Supports all transceiver functions and options. Includes internal speaker and ac power supply (115/230 VAC), or power from 12 Vdc. Distance bounded by signal loss in cable (approximate maximum signal loss -20 dB). Order C992307 control cable separately. If unterminated cables are required, order C992309 (specify length). Includes ac power cord. For dc operation order C991829 power cable. (Radio must be TW7000RF or TW7000 with 7000RF option.)

TW7201I
Full remote control (ISDN). Same as TW7201F, except uses ISDN signaling format. Provides real time operation transparent to the operator. Link includes a spare 9600 bps serial channel. Requires a 2-wire link limited to approximately 2 km. Supplied with C992042 dc power cable. Order C992307 control cable separately. If unterminated cables are required, order C992309 (specify length). (Radio must be TW7000RI or TW7000 with 7000RI option.)

Accessory Equipment for the TW7000

Datron offers a wide variety of accessory equipment with the TW7000 transceiver. The TW7000 can be configured for fixed station usage at RF power levels up to 10 kW. A complete line of both broadband and narrow-band antenna systems, power supplies, and data devices are also available to complement the base transceiver. The preceding pages summarize the Datron accessory equipment that can be used with the TW7000 and show the RF, control, and power cables necessary for proper interconnections.

Miscellaneous Accessories

C1008
Breakout box used with the TW7000 to allow multiple access to Accessory 1. RS232, Printer and Serial Data functions.

C1010
Pre/Postselector interface box (TW7000-series). Required to translate control data between the TW5830 and the TW7000PP. See the TW5830 Pre/Postselector System diagram later in this section.

TW7000IOX
A 4 to 1 “breakout box” for multiple accessory connectors. Allows multiple accessories to be used with a common radio accessory connector.

Amplifiers for the TW7000

TW1000B
High-power amplifier 1.6-30.0 MHz, 1000W SSB, 1000W FSK, rated for continuous operation in all modes. Automatic selection of filters when used with TW7000 transceivers or transmitters. Rack mount, 28 Vdc; requires separate 28V power supply. Order C991541 power cable, C991889 control cable, and C991539 RF cable (PS1000SWA or PS1000B).

TW500B-S
High-power desktop-style, voice-grade amplifier, 1.6-30.0 MHz, 500W PEP (voice), internal 115/230 VAC, 50/60 Hz power supply. Automatic selection of filters when used with TW7000 transceivers. Includes SWR1000 VSWR bridge. Order C991888 control cable and C991539 RF cable. Specify ac voltage when ordering.

TW500B-RMS
Same as the TW500B-S above except it has a 19-inch rack mount, less external case. Order C991888 control cable and C991539 RF cable. Specify ac voltage when ordering.

Note: For manual filter selection, order the TW500B-FS and TW500B-FRMS respectively.

Data Accessories

Datron offers a complete line of modems, software packages, and complementary data accessories to use with the TW7000. Data accessories, data applications, and system configurations are described in detail in the Data Communication Products section.

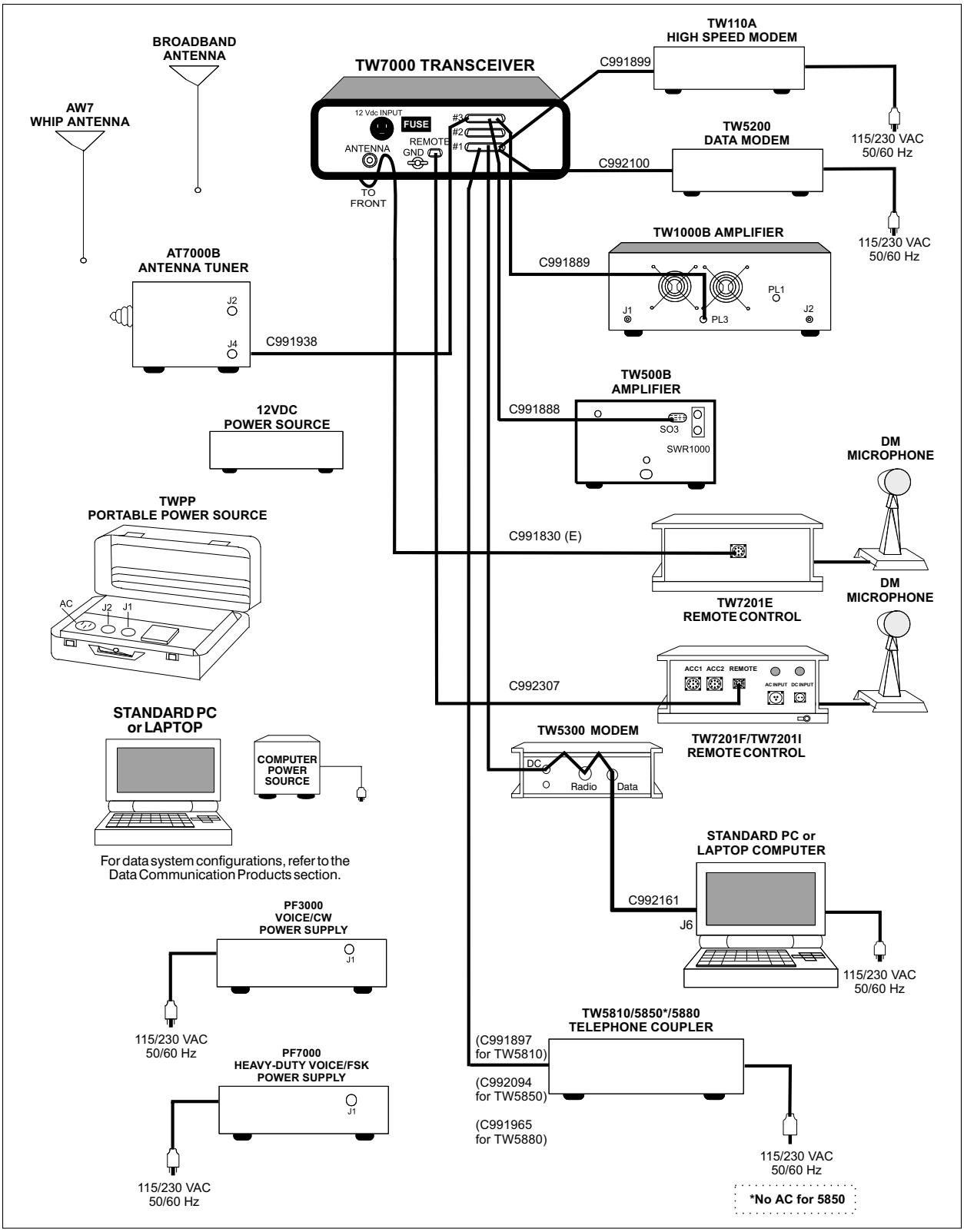

TW7000 Accessories-Control Cabling Diagram

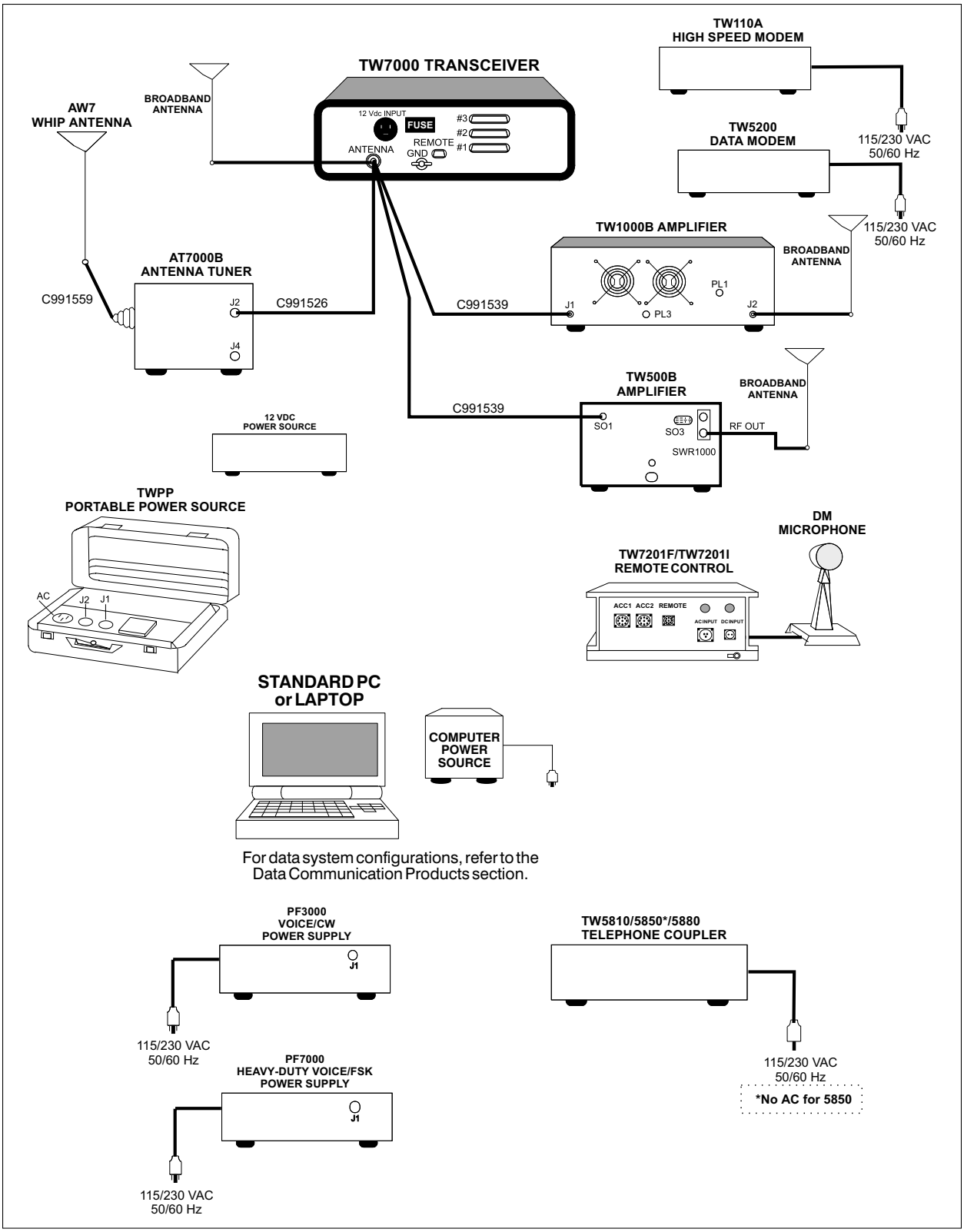

TW7000 Accessories-RF Cabling Diagram

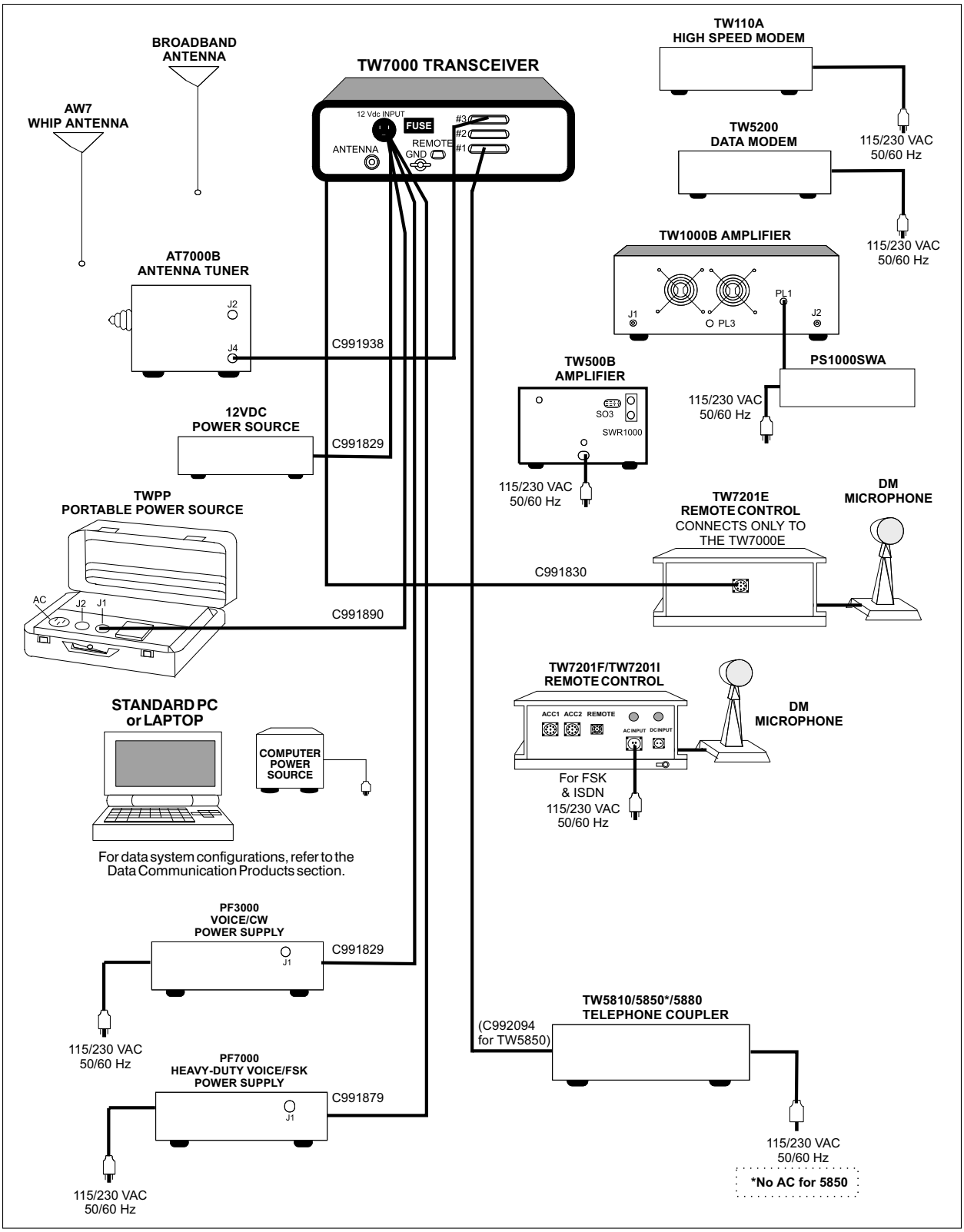

TW7000 Accessories-Power Cabling Diagram

Power Supplies for the TW7000

PF3000-110
Switch mode power supply for operation of transceiver. Switch selectable for either 90-132 VAC or 180-264 VAC. 110 VAC connector on input power cord. Desktop mounting. Uses standard C991829 radio-to-supply cable.

PF3000-220
Same as PF3000-110 except 220 VAC connector on input power cord.

PF3000RM
Rack mount kit for PF3000-110 and PF3000-220. Can also be used with PF7000.

PF7000
Heavy-duty (FSK) power supply. Permits continuous duty FSK operation. Proper operation requires 85-240 VAC, 47-63 Hz input and includes automatic input voltage selection. Order C991879 dc power cable separately.

PF7000-220
Same as the PF7000 except with standard 230 VAC plug on power cord.

Note: For system use with the TW1000B amplifier, the TW7000 may be separately powered by PF3000 or PF7000 power supplies. Specify ac voltage and connector when ordering the power cord.

PS1000B
CVT power supply, 28 Vdc 100 A peak output, 19-inch rack mount. Supplies TW1000B amplifier. Proper operation requires 115 or 230 VAC (10%), 50/60 Hz input. Order C991541 power cable separately. Specify ac voltage and frequency when ordering.

PS1000SWA
Switched mode 230 VAC, 50/60 Hz, power supply with power factor correction (PFC). Dual output-28 Vdc at 3000W to power external amplifiers and 12 Vdc to power a TW7000-series transceiver. Includes ac power cable. Order dc cable(s) separately. Supplied in rack mount configuration.

TWPSA
Provides for automatic switching to a customer supplied battery if external power fails. Power supply adapter for 12 Vdc and 28 Vdc input transceivers. Trickle charges battery when primary power is available. Order dc power and interface cables separately.

Broadband Antennas for the TW7000

Datron offers a complete line of broadband HF antennas for fixed station use when space for a proper installation is available. Antenna mast not included unless specified.

ABB100A
Broadband antenna 2-30 MHz, 125W. Supplied with 30m RG213 coaxial cable and PL-259 (UHF) connector. Extended length model for increased efficiency in 2-10 MHz range. (Antenna length is 43.3m)

ABB100B
Broadband antenna 2-30 MHz, 125W. Supplied with 30m RG213 coaxial cable and PL-259 (UHF) connector. (Antenna length is 34.1m)

ABB1000A
Broadband antenna, 2-30 MHz, 1000W. Supplied with 30m RG213 coaxial cable and PL-259 (UHF) connector. Extended length model for increased efficiency in 2-10 MHz range. (Antenna length is 43.3m)

ABB1000B
Broadband antenna, 2-30 MHz, 1000W, supplied with 30m RG213 coaxial cable and PL-259 (UHF) connector. (Antenna length is 34.1m)

AMX
Portable antenna mast kit for ABB100 and ABB1000-series antennas. Includes 20m of mast sections, guy rings, dacron rope guys, guy stakes, mast bases, raising halyard rope, and pulley supplied in canvas carrying bag with guy hammer.

CX
Coaxial cable RG213 for cable lengths over 30m. Specify length and add additional cost of cable (RG213).

Stationary Dipole Antennas for the TW7000

With balun and 15m RG213 coaxial cable (specify operating frequencies). Requires support masts.

AD1
One frequency dipole.

AD2
Two frequency dipole.

AD3
Three frequency dipole.

AD4
Four frequency dipole.

Narrow-band Antennas for the TW7000

Narrow-band whip antennas, for both mobile and fixed installation, are available. The narrow-band antennas all require an antenna tuner.

Mobile whip, 2.7m (9 ft.), insulator, heavy-duty spring and mounting base (requires 3 mounting holes in vehicle body).

ALW
Long-wire antenna kit. Includes 23m of antenna wire, 15m of hang-up rope, and 2 insulators.

AW7
Side-feed whip, flange mount, 7m (23 ft.).

AW10
Side-feed whip, flange mount 10.5m (35 ft.).

AWM
Mobile use antenna, whip with spring base, 2.7m (9 ft.).

Antenna Tuners for the TW7000

AT7000B
Automatic antenna tuner in weatherproof case; 150W. Operates with whips and long-wire antennas. VSWR monitoring and rapid digital tuning capability. Includes memory when used with the TW7000 transceiver providing 100 channel memory capability for scanning or silent tune applications. Includes mobile mounts. Supplied with C991559 0.5m antenna lead. Order C991535 RF cable and C991922 control/power cable separately.

RAT1000
Automatic antenna tuner in ruggedized, immersible case, 1000W (3-30 MHz) for vehicular or marine installations, (2-30 MHz) for fixed installations. +28 Vdc operation. Provides automatic high-speed digital tuning on receipt of actuation signal from transceiver. Operates with most whip and long-wire antennas to 50m in length. Includes 10 channels for scanning or silent tuning applications. Supplied with C991620 0.5m antenna lead.

RAT1000P
Special interface and 28 Vdc power supply unit to use with the TW7000 and TW500B using the RAT1000 tuner when operation is from a 12 Vdc source. Contains interface connectors for control cables. Powered from 115/230 VAC, 50/60 Hz source. Order C991886 (16 ft.) or C991906 (4 ft. for rack use) control cable (RAT1000P to TW7000) and C991552 control cable (RAT1000P to RAT1000) separately. Specify ac voltage when ordering.

Telephone Interface Devices

Supplied less interface cable. Order cable as indicated.

TW5810

Rack-mounted telephone coupler provides interface between the transceiver or other 600 ohm audio system and the telephone line using DSP (Digital Signal Processing) technology. Contains VOX circuit for automatic voice switching. Provides automatic adjustments of levels and VOX. Proper operation requires 115 or 230 VAC (±15%), 47-63 Hz input. Order C991897 interface cable for TW7000. Specify ac operating voltage when ordering.

TW5810-12

Identical to the TW5810 with the additional capability of operating from 12 Vdc. Order C991936 interface cable for TW7000.

TW5810-28

Identical to the TW5810 with the additional capability of operating from 28 Vdc.

TW5850

Identical to the TW5810 except it has desktop-style mounting. Operating voltage of 12 Vdc is obtained from the TW7000.

TW5880

TRANSTEL radio/telephone terminal with built-in telephone and handset. Rack mounted. When used in conjunction with 7000-series radios equipped with the ALE option, it provides end-to-end dialing capability between PABX or public telephone networks. English language digitized voice prompts are standard. For custom voice prompts, contact your Datron Representative. Includes keypad for DTMF or pulse dialing, monitor speaker and serial port. Order C991965 cable for connection to the TW7000. Requires 115 or 230 VAC (±15 %), 47-63 Hz input. Specify ac voltage when ordering.

HF/VHF Retransmission Equipment for the TW7000

TW5820

Retransmission unit. Provides interface between HF radios such as the TW7000-series and VHF radios such as the PRC1077. Incorporates DSP technology to provide positive voice detection while providing excellent immunity from false keying on noise. Rack mounted. For cabling details, contact your Datron Representative. Requires 115 or 230 VAC (±15%), 47-63 Hz input. Specify ac voltage when ordering.

TW5820-12

Identical to TW5820 with the additional capability of operating from 12 Vdc.

TW5820-28

Identical to TW5820 with the additional capability of operating from 28 Vdc.

Pre/Postselector

TW5830
The TW5830 Pre/Postselector permits operation of co-located HF receivers and transmitters on frequencies separated by as little as 10%. The TW5830 is housed in a 1.75" x 10.0' rack mount package. Standard operation is from 115/230 VAC or from 12/24 Vdc. The TW5830 will not operate with a standard TW7000 or RT7000 radio, but must be interfaced with the TW7000PP version of transceiver. Order the TW5830INST installation kit for the interface cables and hardware required for operation with the TW7000PP. See the configuration diagram on the following page.

Mounting Kits for the TW7000

PF7000RM
Rack mount kit for the PF7000 power supply (2m high).

TW5810RMS
Rack mount slide kit for the TW5810.

TW5830RMS
Rack mount slide kit for the TW5830.

TW5880RMS
Rack mount slide kit for the TW5880.

TW7000RM
Rack mount for the TW7000 (without slides).

TW7000RMS
Rack mount (with slides). Rack mount complete with slides for extending the transceiver to the front of the rack cabinet. (Optional rack cabinets available include RACK7100 and RACK7500.)

TW7000SM
Shock mount. Mobile shock mount for the TW7000-series.

TW7201MM
Mobile mount for TW7201-series.

TW7201RM
Rack mount for TW7201F/TW7201I.
Rack-mount panel for 19-inch rack mounting.

Audio Accessories for the TW7000

Supplied with connectors for TW7000.

HP
Headphones, twin.

PM
Heavy-duty hand microphone.

DM
Dynamic desk microphone.

KEY
Morse key.

EP
Headphones.

EPL
Lightweight headphones.

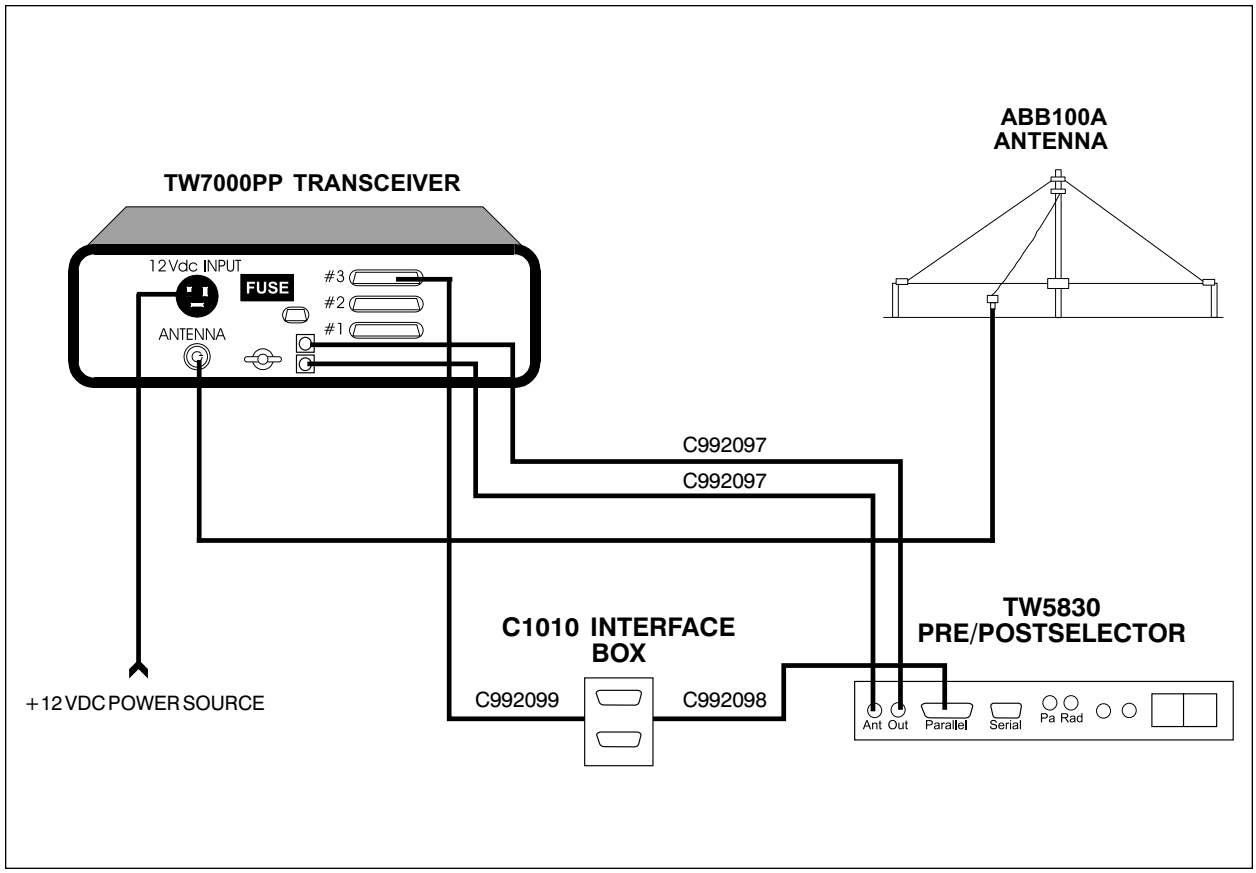

TW5830 Pre/Postselector System

TW7000 System Configurations

Many different 125W, 400W, and 1 kW system configurations are available using the TW7000 as the core. They are shown in the following pages with all system components and interconnecting cables. The TW7000 can be used in any of the illustrated systems with the proper power supply.

TW7000 System Descriptions	Mobile (M) or Base (B) Station	RF Power Output	Whip (W) or Broadband (B)	Voice/ Data	Remote Control
12 Vdc, Voice, Antenna Tuner, Mobile System, with Whip Antenna	M	125W	W	V	
12 Vdc, Voice/Extended Control, Antenna Tuner, Mobile System, with Whip Antenna	M	125W	W	V	Extended
AC/Voice/Data, Antenna Tuner, Whip Antenna, and Interface for Standard Computer	B	125W	W	V/D	
AC/Voice/Data, Broadband Antenna, and Interface for Standard Computer	B	125W	B	V/D	
AC/Voice/Rc, Long Distance Remote Control, Antenna Tuner, Whip Antenna, and Interface for Standard Computer	B	125W	W	V	FSK
AC/Voice/Rc, Remote Control, Broadband Antenna	B	125W	B	V	FSK
AC/Voice/Data, ISDN Remote Control, Antenna Tuner, Whip Antenna	B	125W	W	V/D	ISDN
AC/Voice/Data, ISDN Remote Control, Broadband Antenna	B	125W	B	V/D	ISDN
AC/Voice/ALE, Antenna Tuner, Whip Antenna	B	125W	W	V	
AC/Voice/ALE, Broadband Antenna	B	125W	B	V	
AC/Voice, Antenna Tuner, Whip Antenna, 500W Amplifier	B	500W	W	V	
AC/Voice, Broadband Antenna, 500W Amplifier	B	500W	B	V	
AC/Voice, Antenna Tuner, Whip Antenna, 1 kW Amplifier, 230 VAC	B	1000W	W	V	
AC/Voice, Broadband Antenna, 1 kW Amplifier, 230 VAC	B	1000W	B	V	
AC/Voice/Data, Antenna Tuner, Whip Antenna, 1 kW Amplifier, 230 VAC	B	1000W	W	V/D	
AC/Voice/Data, Broadband Antenna, 1 kW Amplifier, 230 VAC	B	1000W	B	V/D	

TM7000/TS7000 125W HF SYSTEMS

- 1.6 MHz-30 MHz (receive 100 kHz-30 MHz)
- Synthesized 10 Hz Steps
- Up to 1000 Memory Channels
- 125W PEP/Average Output
- High-Level Encryption
- Voice and Data System
- DSP-Based Speech Processing
- Multi-Protocol Remote Control Capabilities
- Dual ALE Capability

TM7000

The core TM7000 system is a complete 125W mobile station that is shock-mounted and consists of a transceiver, and whip antenna system (narrow-band antenna and appropriate tuner). These systems include a mobile mount for the transceiver. They are designed to be powered from either a vehicle battery or an appropriate generator.

TS7000

The core TS7000 system is a complete 125W base station that is stack-mounted and consists of a transceiver, modem, and appropriate antenna system. By adding the suitable accessory equipment, Datron is able to offer a broad range of voice and data systems for either local or remote control applications. These systems use separate power supplies which can be powered from generator or the ac mains. Either narrow-band (whip) antennas or broadband antennas can be accommodated, however, systems using narrow-band antennas require an automatic antenna tuner.

The configurations shown in this section are merely core systems and do not represent the extent of what can be done. Datron's trained Systems Engineering Group will be glad to assist users in configuring a custom system exactly suited to their needs. All necessary equipment will be seamlessly integrated into the system as required to satisfy the desired functionality. For more information, contact your Datron Representative.

12 Vdc, Voice, Antenna Tuner, Mobile System, with Whip Antenna

Item	Quantity Supplied	DWC P/N	Description
1	1	TW7000	Transceiver, HF, 125W, 1.6-30 MHz (receive 100 kHz to 30 MHz). Includes C991829 dc power cable.
2	1	AT7000B	Antenna tuner, 150W, automatic. Includes C991559 antenna lead.
3	1	AWM	Antenna, mobile whip (2.7m), insulator, heavy-duty spring and mounting base.
4	1	TW7000MM	Mobile mount, TW7000.
5	1	PM	Hand microphone.
6	1	C991526	TW7000 to AT7000B, RF cable.
7	1	C991938	TW7000 to AT7000B, control cable.
ALE Option			
Add:	1	7000ALE	Internal FED-STD-1045A ALE module with controller software.

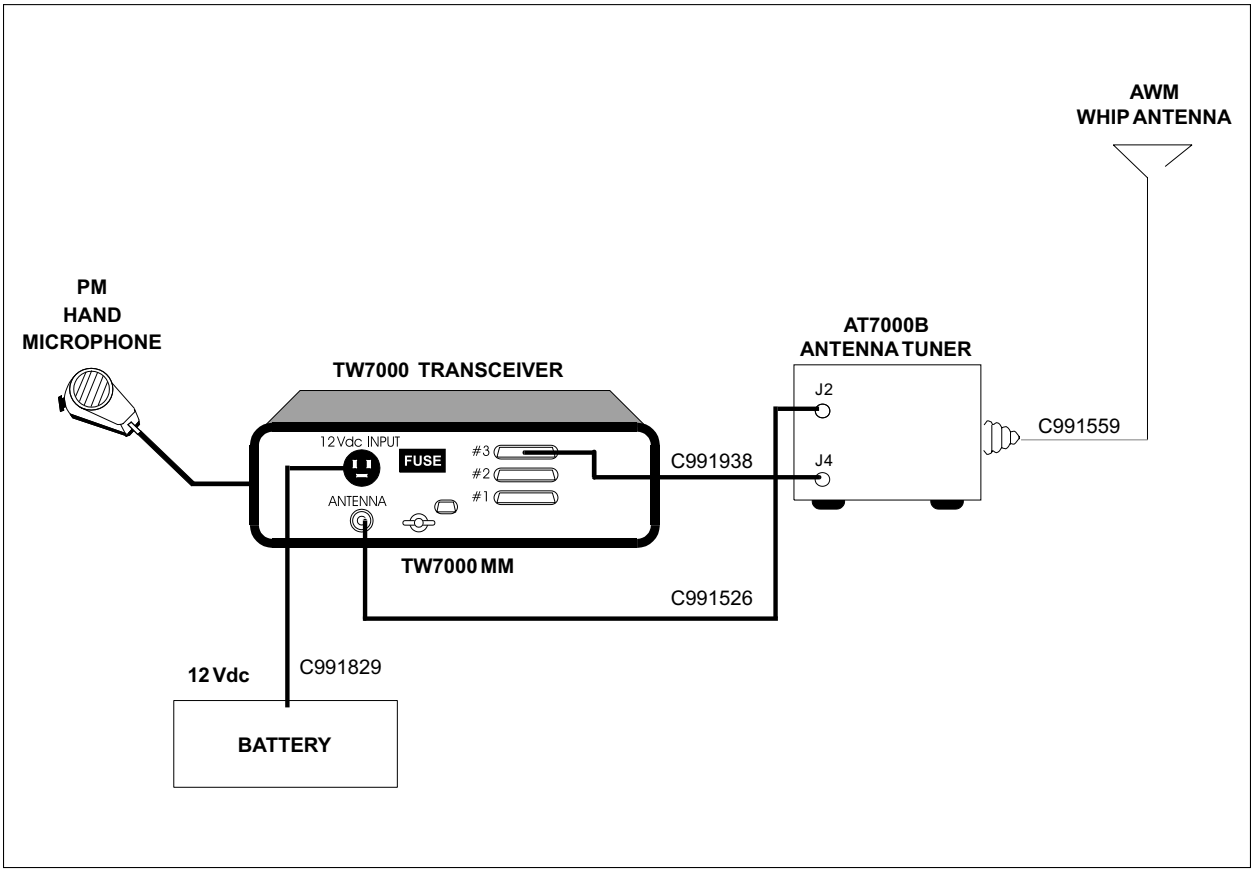

12 Vdc, Voice/Extended Control, Antenna Tuner, Mobile System, with Whip Antenna

Item	Quantity Supplied	DWC P/N	Description
1	1	TW7000E	Transceiver, with blank front panel, HF, 125W, 1.6-30 MHz (receive 100 kHz to 30 MHz). Includes C991829 dc power cable.
2	1	TW7201E	Extended remote control.
3	1	TW7201MM	Mobile mount, for remote control.
4	1	AT7000B	Antenna tuner, 150W, automatic. Includes C991559 antenna lead.
5	1	AWM	Antenna, mobile whip (2.7m), insulator, heavy-duty spring and mounting base.
6	1	TW7000MM	Mobile mount, TW7000.
7	1	PM	Hand microphone.
8	1	C991526	TW7000E to AT7000B, RF cable.
9	1	C991830	TW7000E to TW7201E, control/power cable.
10	1	C991938	TW7000E to AT7000B, control cable.

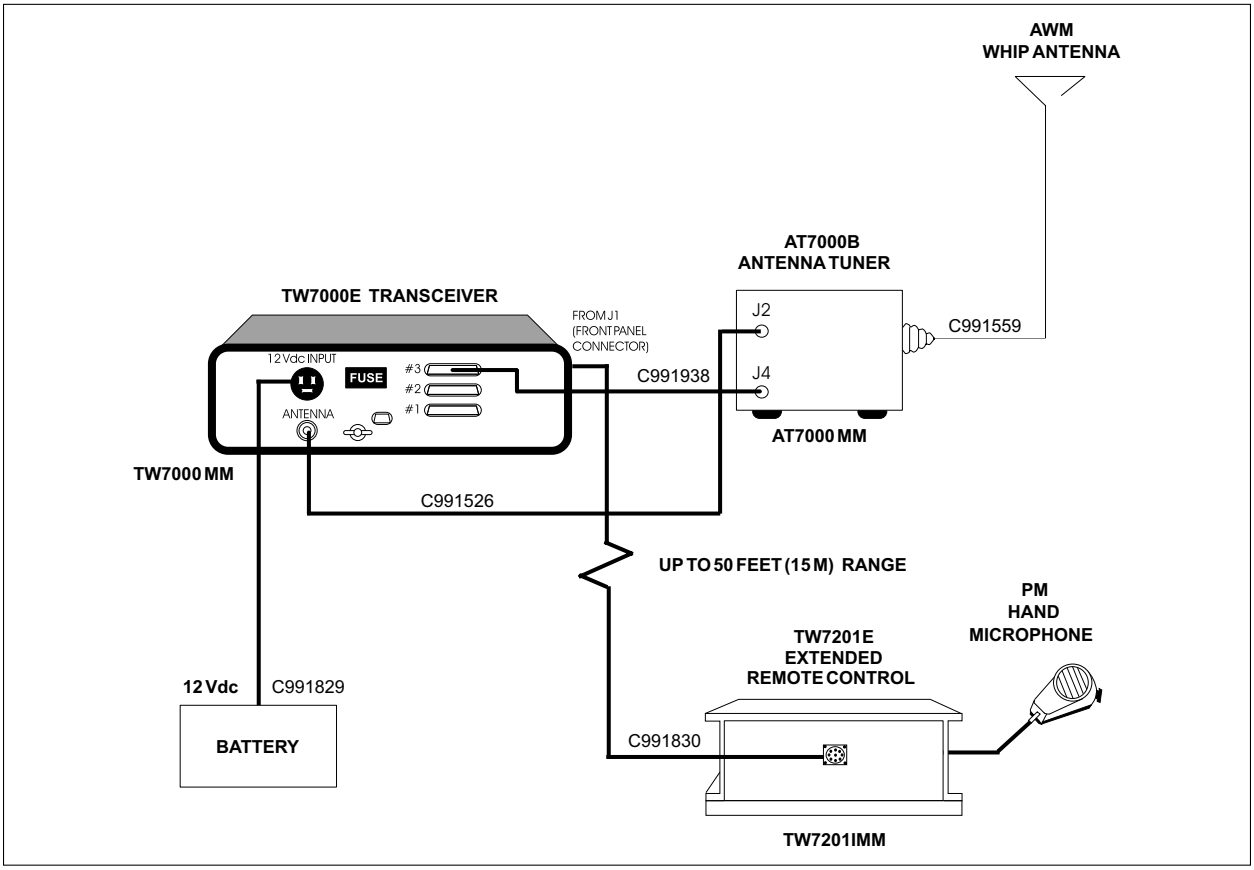

AC/Voice/Data, Antenna Tuner, Whip Antenna, and Interface for Standard Computer

Item	Quantity Supplied	DWC P/N	Description
1	1	TW7000	Transceiver, HF, 125W, 1.6-30 MHz (receive 100 kHz to 30 MHz). Includes C991829 dc power cable.
2	1	PF7000	Power supply, heavy-duty (FSK), 115/230 VAC, 50-60 Hz input.
3	1	AT7000B	Antenna tuner, 150W, automatic. Includes C991559 antenna lead.
4	1	AW7	Antenna, whip, 7m, flange mount with side feed.
5	1	TW5300	High-speed HF modem, adaptive ARQ protocol.
6	1	DTS	Network software.
7	1	DM	Dynamic desk microphone.
8	1	C991526	TW7000 to AT7000B, RF cable.
9	1	C991879	TW7000 to PF7000, dc power cable.
10	1	C991938	TW7000 to AT7000B, control cable.
11	1	C992161	TW7000 to TW5300 and computer, Y-cable, series control cable.
ALE Option			
Add:	1	7000ALE	Internal FED-STD-1045A ALE module with controller software.
Antenna Option			
Add:	1	ALW	Antenna, long wire, 75 ft. (replaces AW7).
	1	AW10	Antenna, whip, 10m, flange mount with side feed (replaces AW7).

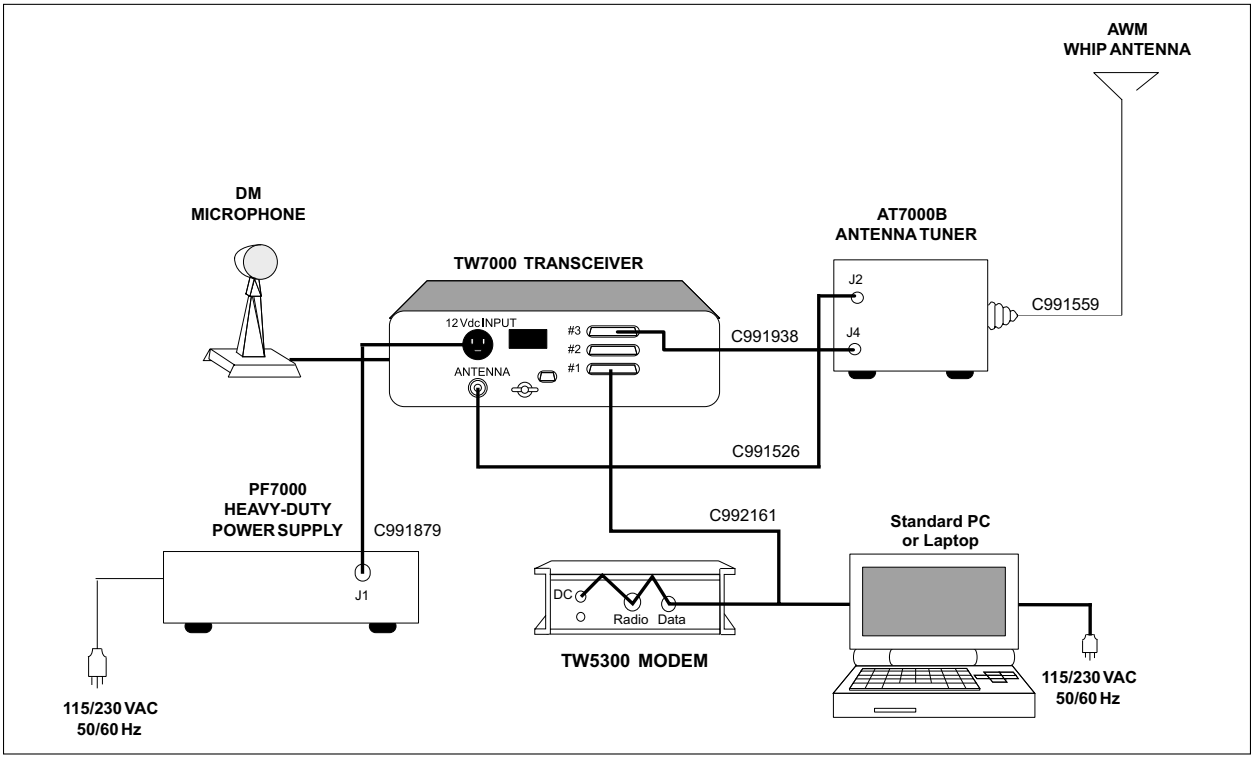

AC/Voice/Data, Broadband Antenna, and Interface for Standard Computer

Item	Quantity Supplied	DWC P/N	Description
1	1	TW7000	Transceiver, HF, 125W, 1.6-30 MHz (receive 100 kHz to 30 MHz). Includes C991829 dc power cable.
2	1	PF7000	Power supply, heavy-duty (FSK), 115/230 VAC, 50-60 Hz input.
3	1	ABB100A	Antenna, broadband, 2-30 MHz, 150W, with 30m coax.
4	1	TW5300	High-speed HF modem, adaptive ARQ protocol.
5	1	DTS	Network software.
6	1	DM	Dynamic desk microphone.
7	1	C991879	TW7000 to PF7000, dc power cable.
8	1	C992161	TW7000 to TW5300 and computer, Y-cable, series control cable.
ALE Option			
Add:	1	7000ALE	Internal FED-STD-1045A ALE module with controller software.
Mast Option			
Add:	1	AMX	Portable antenna mast kit for ABB100A.

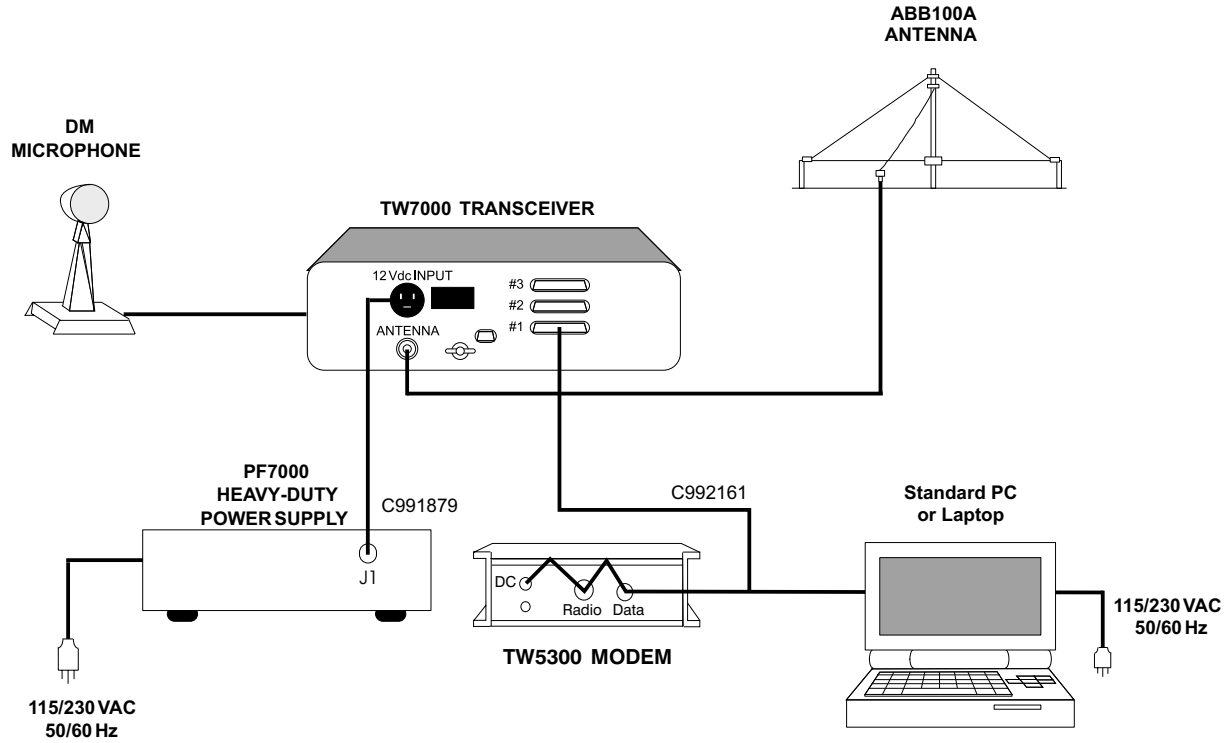

AC/Voice/Rc, Long Distance Remote Control, Antenna Tuner, Whip Antenna, and Interface for Standard Computer

Item	Quantity Supplied	DWC P/N	Description
1	1	TW7000	Transceiver, HF, 125W, 1.6-30 MHz (receive 100 kHz to 30 MHz). Includes C991829 dc power cable.
2	1	PF3000	Power supply, voice/CW duty, 90-132 VAC or 180-264 VAC 50-60 Hz input.
3	1	TW7201F	Remote control console (FSK) with internal power supply.
4	1	AT7000B	Antenna tuner, 150W, automatic. Includes C991559 antenna lead.
5	1	AW7	Antenna, whip, 7m, flange mount with side feed.
6	1	7000RF	FSK modem assembly.
7	2	DM	Dynamic desk microphone.
8	1	C991526	TW7000(RF) to AT7000B, RF cable.
9	1	C991938	TW7000(RF) to AT7000B, control cable.
10	1	C992307	TW7000(RF) to TW7201F, control cable. If unterminated cables are required, order C992309 (specify length).
ALE Option			
Add:	1	7000ALE	Internal FED-STD-1045A ALE module with controller software.
Antenna Option			
Add:	1	ALW	Antenna, long wire, 75 ft. (replaces AW7).
	1	AW10	Antenna, whip, 10m, flange mount with side feed (replaces AW7).
Remote Only Option			
Add:	1	TW7000RF	Transceiver, HF 125W, 1.6-30 MHz, for remote control. Includes C991829 dc power cable.
Delete:	1	TW7000	Transceiver, HF, 125W, 1.6-30 MHz (receive 100 kHz to 30 MHz).
	1	7000RF	FSK modem assembly.
	1	DM	Dynamic desk microphone.

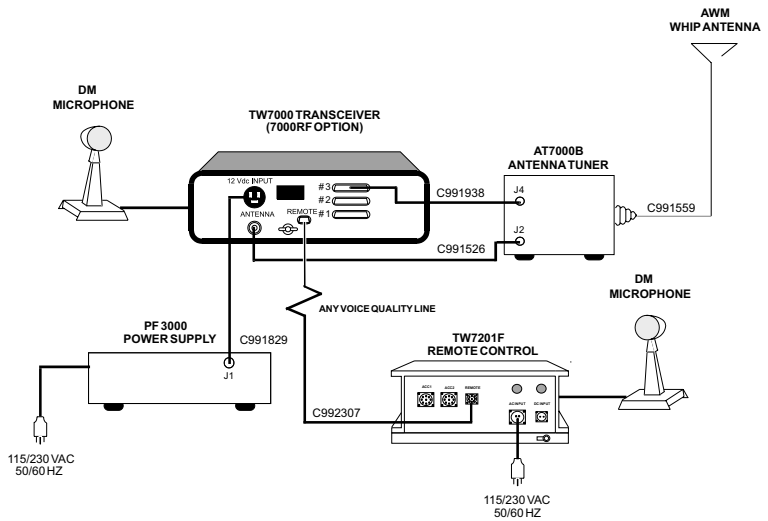

AC/Voice/Rc, Remote Control, Broadband Antenna

Item	Quantity Supplied	DWC P/N	Description
1	1	TW7000	Transceiver, HF, 125W, 1.6-30 MHz (receive 100 kHz to 30 MHz). Includes C991829 dc power cable.
2	1	PF3000	Power supply, voice/CW duty, 90-132 VAC or 180-264 VAC 50-60 Hz input.
3	1	TW7201F	Remote control console (FSK) with internal power supply.
4	1	ABB100A	Antenna, broadband, 2-30 MHz, 150W, with 30m coax.
5	1	7000RF	FSK modem assembly.
6	2	DM	Dynamic desk microphone.
7	1	C992307	TW7000RF to TW7201F, control cable. If unterminated cables are required, order C992309 (specify length).
Mast Option			
Add:	1	AMX	Portable antenna mast kit for ABB100A.
Remote Only Option			
Add:	1	TW7000RF	Transceiver, HF 125W, 1.6-30 MHz, for remote control. Includes C991829 dc power cable.
Delete:	1	TW7000	Transceiver, HF, 125W, 1.6-30 MHz (receive 100 kHz to 30 MHz).
	1	7000RF	FSK modem assembly.
	1	DM	Dynamic desk microphone.

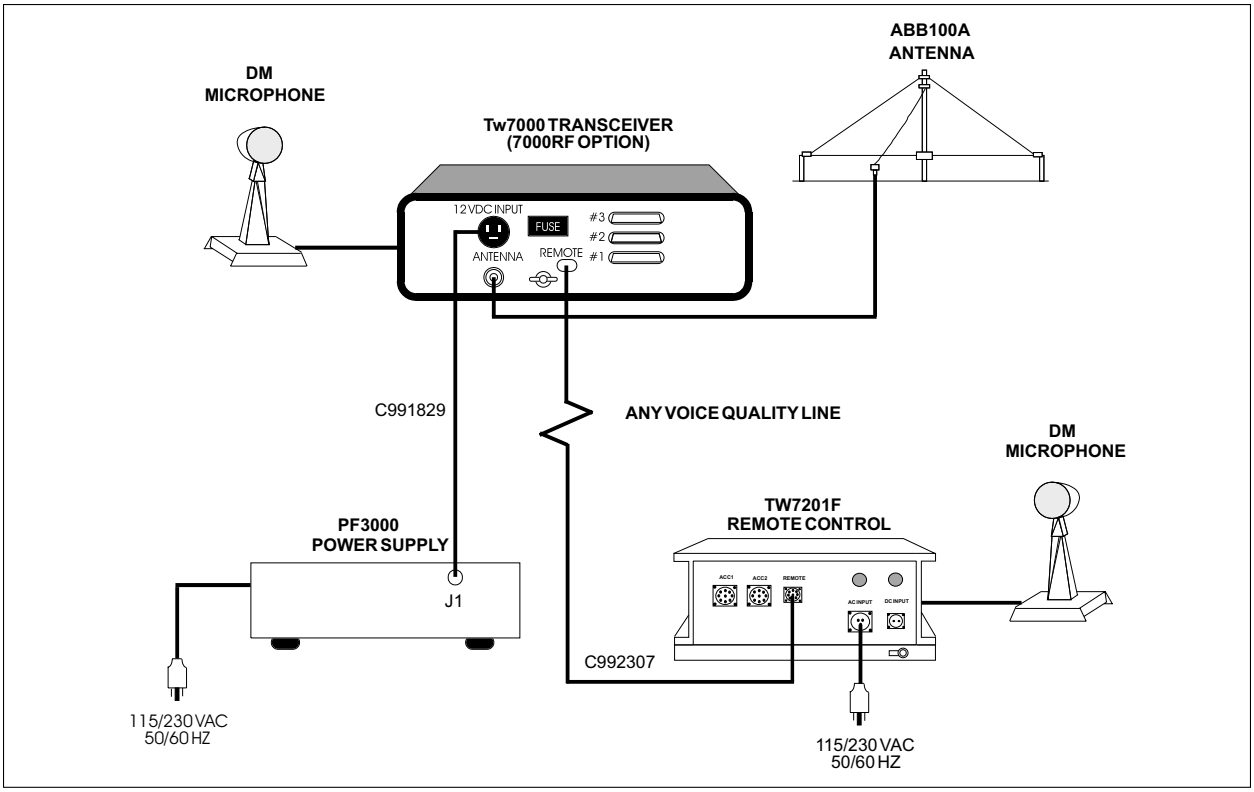

AC/Voice/Data, ISDN Remote Control, Antenna Tuner, Whip Antenna

Item	Quantity Supplied	DWC P/N	Description
1	1	TW7000	Transceiver, HF, 125W, 1.6-30 MHz (receive 100 kHz to 30 MHz). Includes C991829 dc power cable.
2	1	TW7201I	Remote control console (ISDN) with internal power supply.
3	1	PF7000	Power supply, heavy-duty (FSK), 115/230 VAC, 50-60 Hz input.
4	1	AT7000B	Antenna tuner, 150W, automatic. Includes C991559 antenna lead.
5	1	AW7	Antenna, whip, 7m, flange mount with side feed.
6	1	TW5300	High-speed HF modem, adaptive ARQ protocol.
7	1	7000RI	PC assembly (ISDN) modem for TW7000.
8	1	DTS	Network software.
9	2	DM	Dynamic desk microphone.
10	1	C991526	TW7000 to AT7000B, RF cable.
11	1	C991879	TW7000 to PF7000, dc power cable.
12	1	C991938	TW7000 to AT7000B, RF control cable.
13	1	C992161	TW7000 to TW5300 and computer, Y-cable, series control cable.
14	1	C992307	TW7000 to TW7201I, control cable. If unterminated cables are required, order C992309 (specify length).
ALE Option			
Add:	1	7000ALE	Internal FED-STD-1045A ALE module with controller software.
Antenna Option			
Add:	1	ALW	Antenna, long wire, 75 ft. (replaces AW7).
	1	AW10	Antenna, whip, 10m, flange mount with side feed (replaces AW7).
Remote Only Option			
Add:	1	TW7000RI	Transceiver, HF 125W, 1.6-30 MHz, for remote control.
Delete:	1	TW7000	Transceiver, HF, 125W, 1.6-30 MHz (receive 100 kHz to 30 MHz).
	1	7000RI	PC assembly (ISDN) modem for TW7000.
	1	DM	Dynamic desk microphone.

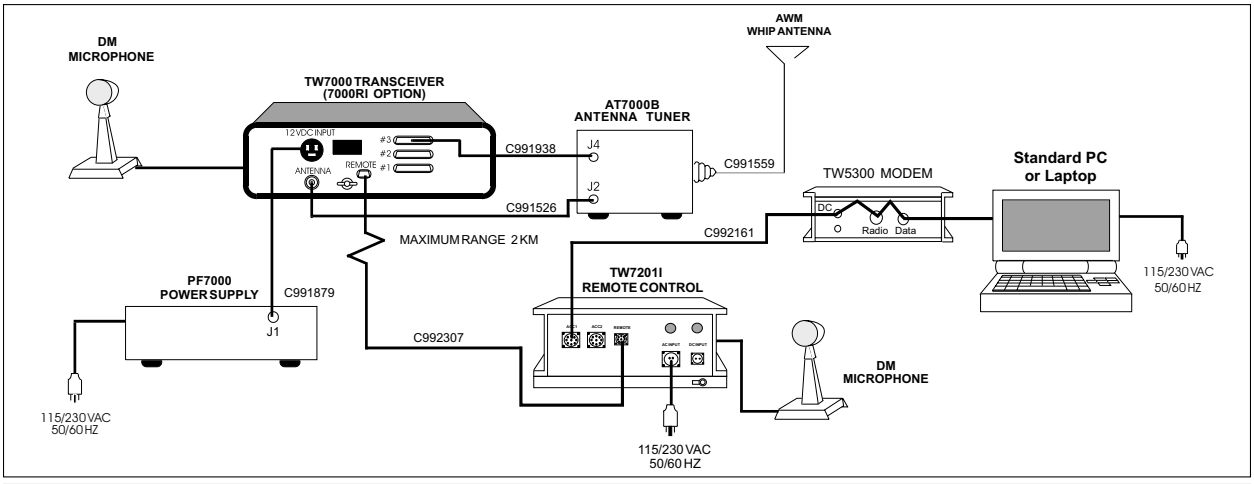

AC/Voice/Data, ISDN Remote Control, Broadband Antenna

Item	Quantity Supplied	DWC P/N	Description
1	1	TW7000	Transceiver, HF, 125W, 1.6-30 MHz (receive 100 kHz to 30 MHz). Includes C991829 dc power cable.
2	1	TW7201I	Remote control console (ISDN) with internal power supply.
3	1	PF7000	Power supply, heavy-duty (FSK), 115/230 VAC, 50-60 Hz input.
4	1	ABB100A	Antenna, broadband, 2-30 MHz, 150W, with 30m coax.
5	1	TW5300	High-speed HF modem, adaptive ARQ protocol.
6	1	7000RI	PC assembly (ISDN) modem for TW7000.
7	1	DTS	Network software.
8	2	DM	Dynamic desk microphone.
9	1	C991879	TW7000RI to PF7000, dc power cable.
10	1	C992161	TW7000 to TW5300 and computer, Y-cable, series control cable.
11	1	C992307	TW7000RI to TW7201I, control cable. If unterminated cables are required, order C992309 (specify length).
ALE Option			
Add:	1	7000ALE	Internal FED-STD-1045A ALE module with controller software.
Mast Option			
Add:	1	AMX	Portable antenna mast kit for ABB100A.
Remote Only Option			
Add:	1	TW7000RI	Transceiver, HF 125W, 1.6-30 MHz, for remote control.
Delete:	1	TW7000	Transceiver, HF, 125W, 1.6-30 MHz (receive 100 kHz to 30 MHz).
	1	7000RI	PC assembly (ISDN) modem for TW7000.
	1	DM	Dynamic desk microphone.

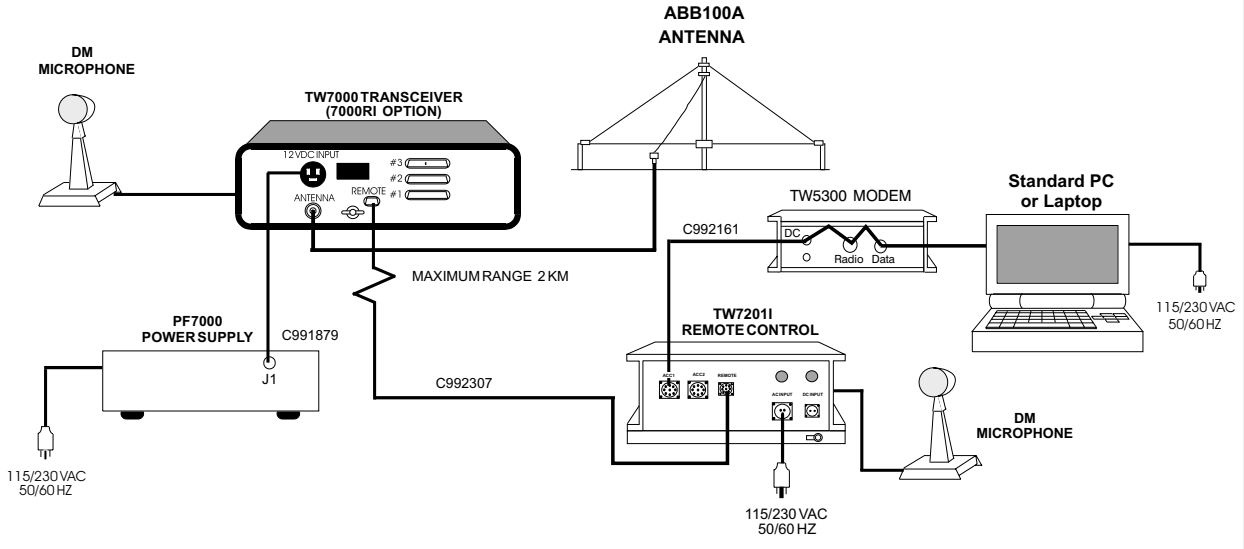

AC/Voice/ALE, Antenna Tuner, Whip Antenna

Item	Quantity Supplied	DWC P/N	Description
1	1	TW7000	Transceiver, HF, 125W, 1.6-30 MHz (receive 100 kHz to 30 MHz). Includes C991829 dc power cable.
2	1	PF7000	Power supply, heavy-duty (FSK), 115/230 VAC, 50-60 Hz input.
3	1	AT7000B	Antenna tuner, 150W, automatic. Includes C991559 antenna lead.
4	1	AW7	Antenna, whip, 7m, flange mount with side feed.
5	1	7000ALE	Internal FED-STD-1045A ALE module with controller software.
6	1	DM	Dynamic desk microphone.
7	1	C991526	TW7000 to AT7000B, RF cable.
8	1	C991879	TW7000 to PF7000, dc power cable.
9	1	C991938	TW7000 to AT7000B, RF control cable.
Antenna Option			
Add:	1	ALW	Antenna, long wire, 75 ft. (replaces AW7).
	1	AW10	Antenna, whip, 10m, flange mount with side feed (replaces AW7).
Power Supply Option			
Add:	1	PS7000	Regulated linear power supply, 115/230 VAC, 50/60 Hz input.
Delete:	1	PF7000	Power supply, heavy-duty (FSK), 115/230 VAC, 50-60 Hz input.
	1	C991879	TW7000 to PF7000, dc power cable.

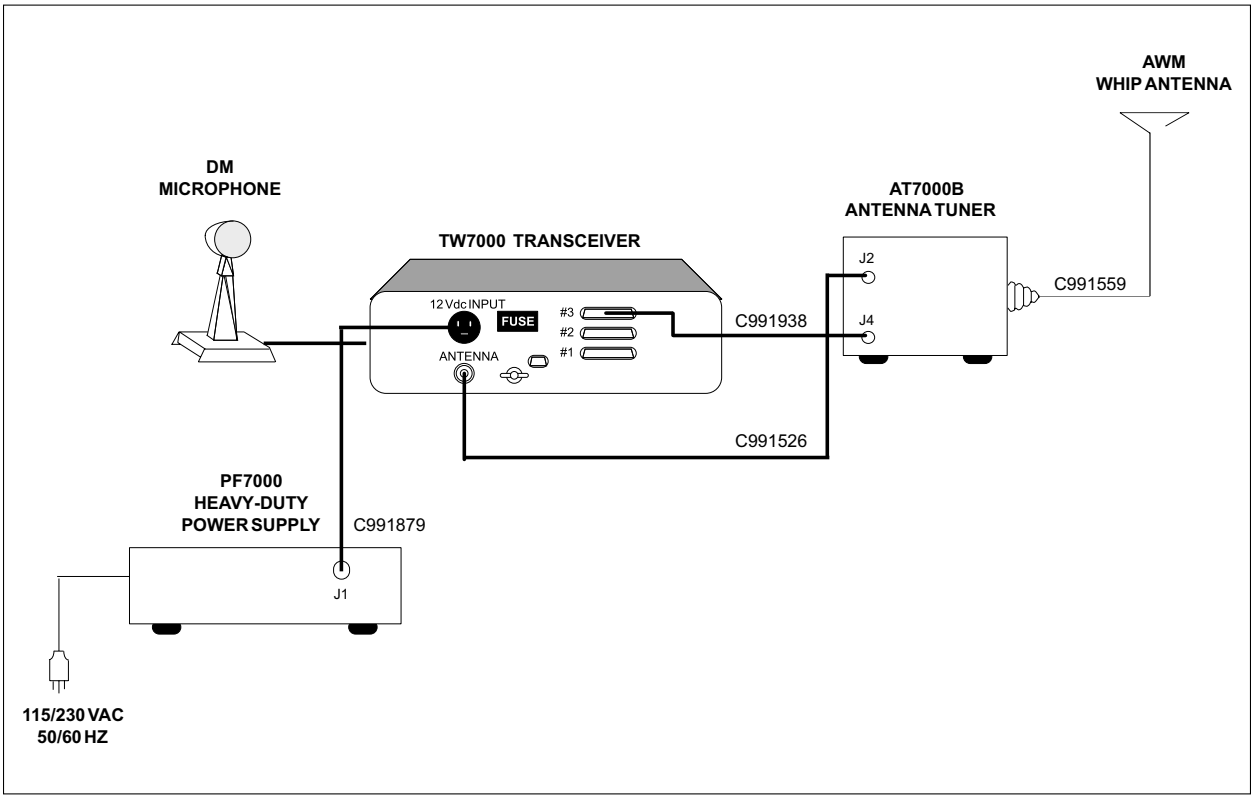

AC/Voice/ALE, Broadband Antenna

Item	Quantity Supplied	DWC P/N	Description
1	1	TW7000	Transceiver, HF, 125W, 1.6-30 MHz (receive 100 kHz to 30 MHz). Includes C991829 dc power cable.
2	1	PF7000	Power supply, heavy-duty (FSK), 115/230 VAC, 50-60 Hz input.
3	1	ABB100A	Antenna, broadband, 2-30 MHz, 150W, with 30m coax.
4	1	7000ALE	Internal FED-STD-1045A ALE module with controller software.
5	1	DM	Dynamic desk microphone.
6	1	C991879	TW7000 to PF7000, dc power cable.
Mast Option			
Add:	1	AMX	Portable antenna mast kit for ABB100A.
Power Supply Option			
Add:	1	PS7000	Regulated linear power supply, 115/230 VAC, 50/60 Hz input.
Delete:	1	PF7000	Power supply, heavy-duty (FSK), 115/230 VAC, 50-60 Hz input.
	1	C991879	TW7000 to PF7000, dc power cable.

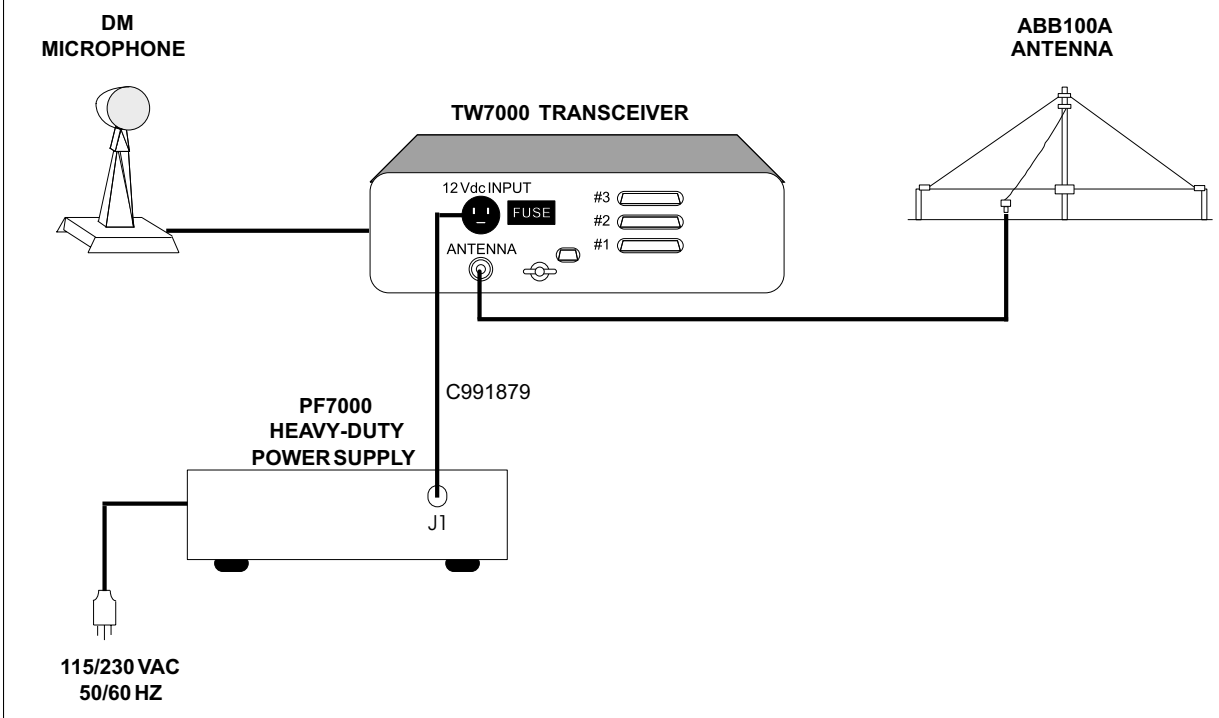

TS7100 500W HF SYSTEM

- 1.6 MHz-30 MHz (receive 100 kHz-30 MHz)
- Synthesized 10 Hz Steps
- Up to 1000 Memory Channels
- 500W PEP/Average Output
- 125W Backup
- All Solid State
- Multi-Mode Capabilities
- Multi-Protocol Remote Control Capabilities
- Dual ALE Capability

Fixed Stations 500W PEP, 115/230 VAC

TS7100 systems are 500W rack-mounted systems designed to be used in a fixed station environment. All equipment uses the RACK7100 rack for mounting. This rack is 21 inches high. In many instances the equipment in a particular system does not "fill-up" the rack. In this case, blank panels can be used to fill the holes. Datron can provide these blank panels in various sizes, from 1-10 U. Standard systems listed in this section have blank panels included where necessary. However, if you are ordering a "nonstandard" system you must specify what blank panels you need with your order.

The standard systems shown in this section include a diagram indicating the location of all the equipment in the rack. If you want your system configured other than as shown, specify when you order.

See the following pages for systems. (Supplied with operator manual and interface cables. Order technical manual separately.)

Note: Refer to catalog sections for complete descriptions of system components.

Rack Cabinets

RACK7100
19 in. W x 21 in. H enclosed rack cabinet for TW7100 systems. Total rack units equals 12 U. There is space for the TW500B amplifier, TW7000 transceiver, and one additional blank panel. Includes 115 VAC/60 Hz power strip. Custom shock mounts are available.

RACK7100-220
Same as RACK7100 except for 230 VAC/50 Hz system. Has NEMA 6-20R receptacles and NEMA 6-15P ac power plug.

RACK7100-OD
Same as RACK7100 except olive drab.

RACK7100-220-OD
Same as RACK7100-220 except olive drab.

Equipment Heights for Racking

Equipment	Rack Heights ("U" units)	Height (inches)
PF7000RM	2 U	3.50
PS1000B	5 U	8.75
PS1000SWA	4 U	7.00
PS7000RM	3 U	5.25
TW1000B	5 U	8.75
TW110A	1 U	1.75
TW500B	6 U	10.50
TW5300	1 U	1.75
TW5810	1 U	1.75
TW5820	1 U	1.75
TW5830	1 U	1.75
TW5880	2 U	3.50
TW7000	3 U	5.25
TW7201	3 U	5.25

Blank Rack Panels

DWC P/N	Rack Height
RP1	1 U
RP2	2 U
RP3	3 U
RP4	4 U
RP5	5 U
RP6	6 U
RP7	7 U
RP8	8 U
RP9	9 U

Note: Panels come in either gray or green. To specify, add the suffix "G" for gray and "D" for green to the basic panel P/N.

AC/Voice, Antenna Tuner, Whip Antenna, 500W Amplifier

Item	Quantity Supplied	DWC P/N	Description
1	1	TW7000	Transceiver, HF, 125W, 1.6-30 MHz (receive 100 kHz to 30 MHz). Includes C991829 dc power cable.
2	1	PF3000	Power supply, voice/CW duty, 90-132 VAC or 180-264 VAC 50-60 Hz input.
3	1	PF3000RM	Rack mount kit for the PF3000.
4	1	TW500B-RMS	RF amplifier, 500W, 1.6-30 MHz, including rack mount panel. Includes SWR1000 VSWR bridge.
5	1	RAT1000	Antenna tuner, automatic digital, 1000W. Includes C991620 antenna lead.
6	1	RAT1000P	Power supply/interface unit for RAT1000 used in TW7100 system.
7	1	AW7	Antenna, whip, 7m, flange mount with side feed.
8	1	RACK7100	Rack cabinet for TW7100 system. 115 VAC.
9	1	TW7000RMS	Rack mount panel with slides for TW7000.
10	1	DM	Dynamic desk microphone.
11	1	C991526	TW500B-RMS to RAT1000, RF cable.
12	1	C991539	TW7000 to TW500B-RMS, RF cable.
13	1	C991552	RAT1000P to RAT1000, control cable.
14	1	C991888	TW7000 to TW500B-RMS, control cable.
15	1	C991906	TW7000 to RAT1000P, control cable.
230 VAC Option			
Add:	1	RACK7100-220	Rack cabinet, 230 VAC.
	1	PS7000RM-220	Power supply, voice/CW duty, 230 VAC 50-60 Hz input, including rack mount panel.
Delete:	1	RACK7100	Rack cabinet for TW7100 system, 115 VAC.
	1	PS7000RM	Power supply, voice/CW duty, 115 VAC 50-60 Hz input, including rack mount panel.

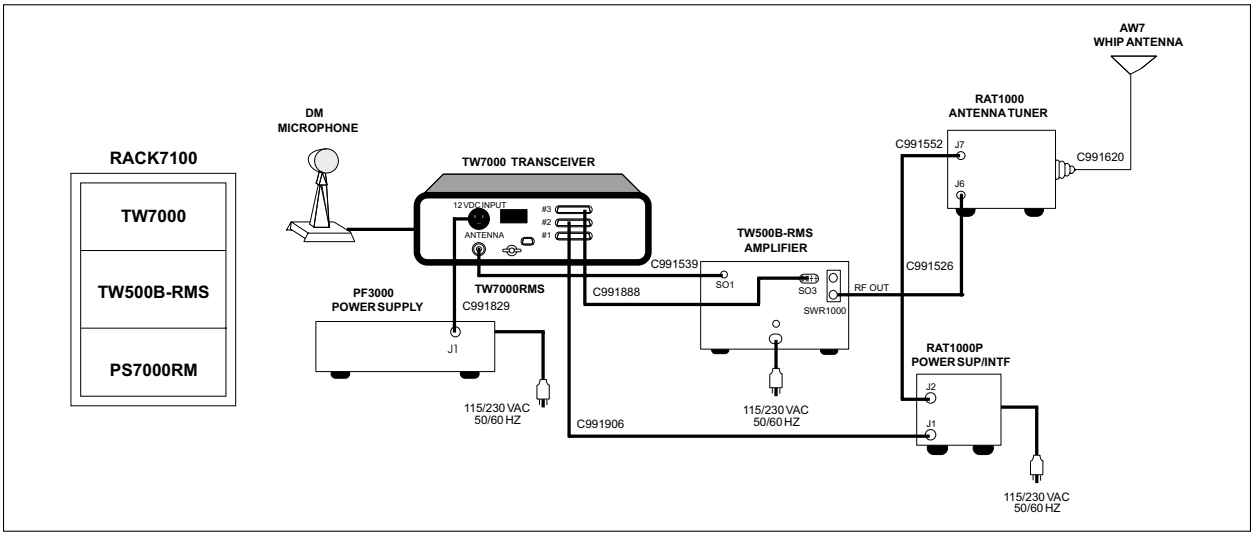

AC/Voice, Broadband Antenna, 500W Amplifier

Item	Quantity Supplied	DWC P/N	Description
1	1	TW7000	Transceiver, HF, 125W, 1.6-30 MHz (receive 100 kHz to 30 MHz). Includes C991829 dc power cable.
2	1	PF3000	Power supply, voice/CW duty, 90-132 VAC or 180-264 VAC 50-60 Hz input.
3	1	PF3000RM	Rack mount kit for the PF3000.
4	1	TW500B-RMS	RF amplifier, 500W, 1.6-30 MHz, including rack mount panel. Includes SWR1000 VSWR bridge.
5	1	ABB1000A	Antenna, broadband, 2-30 MHz, 1000W, with 30m coax.
6	1	RACK7100	Rack cabinet for TW7100 system. 115 VAC.
7	1	TW7000RMS	Rack mount panel with slides for TW7000.
8	1	DM	Dynamic desk microphone.
9	1	C991539	TW7000 to TW500B-RMS, RF cable.
10	1	C991888	TW7000 to TW500B-RMS, control cable.
Mast Option			
Add:	1	AMX	Portable antenna mast kit for ABB100A.
230 VAC Option			
Add:	1	RACK7100-220	Rack cabinet, 230 VAC.
Delete:	1	RACK7100	Rack cabinet for TW7100 system, 115 VAC.

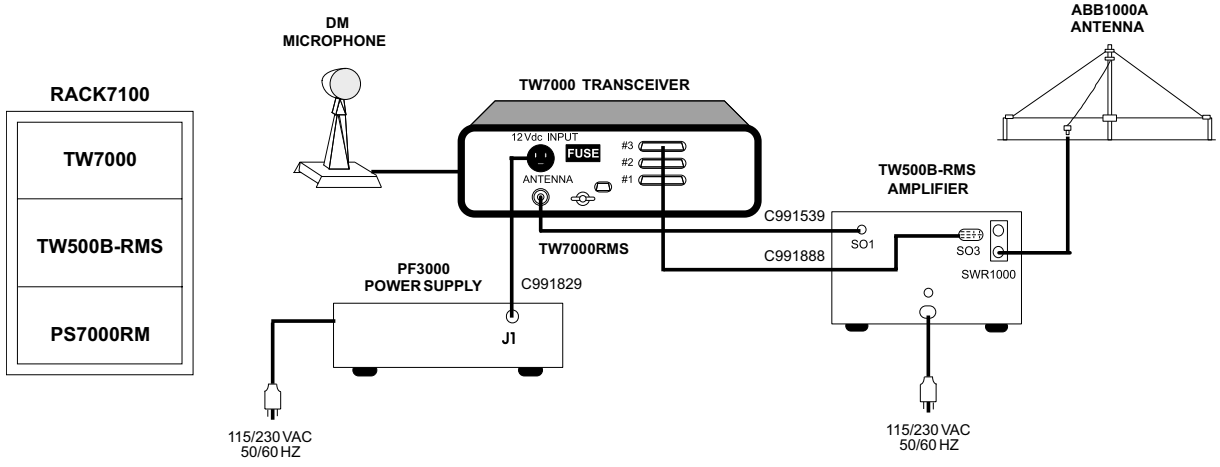

TS7500 1000W HF SYSTEM

- 1000W Continuous Output
- 1.6 MHz-30 MHz (receive 100 kHz-30 MHz)
- Synthesized 10 Hz Steps
- Up to 1000 Memory Channels
- 125W Backup
- Optional Transmitter and Receiver
- Data Operation
- Multi-Mode Capabilities
- Multi-Protocol Remote Control Capabilities
- Dual ALE Capability

Fixed Stations 1000W PEP, 1000W Average, 115/230 VAC

TS7500 systems are 1 kW rack-mounted systems designed to be used in a fixed-station environment. All equipment uses the new RACK7500 rack for mounting. This rack is 33 inches high. In many instances the equipment in a particular system does not "fill up" the rack. In this case, blank panels can be used to fill the holes. Datron can provide these blank panels in various sizes, from 1-10 U. Standard systems listed in this section have blank panels included where necessary. However, if you are ordering a "nonstandard" system you must specify what blank panels you need with your order.

The standard systems shown in this section include a diagram indicating the location of all the equipment in the rack. If you want your system configured other than as shown, specify when you order.

See the following pages for systems. (Supplied with operator manual and interface cables. Order technical manual separately.)

Note: For complete descriptions of system components, refer to catalog sections.

Rack Cabinets

RACK7500
19 in. W x 33 in. H enclosed rack cabinet for TW7500 systems. Total rack units equals 19 U. There is space for the TW1000B amplifier, PS1000B power supply, TW7000 transceiver and two blank panels. Includes 115 VAC/60 Hz power strip. Specify ac voltage when ordering. Custom shock mounts are available.

RACK7500-220
Same as RACK7500 except for 230 VAC/50 Hz systems. Has NEMA 6-20R receptacles in power strip and NEMA 6-15P ac power plug.

RACK7500-OD
Same as RACK7500 except olive drab.

RACK7500-200-OD
Same as the RACK7500-220 except olive drab.

Equipment Heights for Racking

Equipment	Rack Height ("U" units)	Height (inches)
PF7000	2 U	3.50
PS1000B	5 U	8.75
PS1000SWA	4 U	7.00
TW1000B	5 U	8.75
TW110A	1 U	1.75
TW500B	6 U	10.50
TW5300	1 U	1.75
TW5810	1 U	1.75
TW5820	1 U	1.75
TW5830	1 U	1.75
TW5880	2 U	3.50
TW7000	3 U	5.25
TW7201	3 U	5.25

Blank Rack Panels

DWC P/N	Rack Height
RP1	1 U
RP2	2 U
RP3	3 U
RP4	4 U
RP5	5 U
RP6	6 U
RP7	7 U
RP8	8 U
RP9	9 U

Note: Panels come in either gray or green. To specify, add the suffix "G" for gray and "D" for green to the basic panel P/N.

AC/Voice, Antenna Tuner, Whip Antenna, 1 kW Amplifier, 230 VAC

Item	Quantity Supplied	DWC P/N	Description
1	1	TW7000	Transceiver, HF, 125W, 1.6-30 MHz (receive 100 kHz to 30 MHz). Includes C991829 dc power cable.
2	1	TW1000B	RF amplifier, 1000W, 1.6-30 MHz, including rack mount panel.
3	1	PS1000SWA	Power supply, voice/CW duty, dual 12 Vdc and 28 Vdc output, 230 VAC, 50-60 Hz input.
4	1	RAT1000	Antenna tuner, automatic digital, 1000W. Includes C991620 antenna lead.
5	1	AW10	Antenna, whip, 10m, flange mount with side feed.
6	1	RACK7500-220	Rack cabinet for TW7500 system, 230 VAC.
7	1	TW7000RMS	Rack mount panel with slides for TW7000.
8	2	RP2G	Blank rack panel, 2 U.
9	1	RP3G	Blank rack panel, 3 U.
10	1	DM	Dynamic desk microphone.
11	1	C991526	TW1000B to RAT1000, RF cable.
12	1	C991539	TW7000 to TW1000B, RF cable.
13	1	C991541	PS1000SWA to TW1000B, dc power cable.
14	1	C991886	TW7000 to RAT1000, control cable.
15	1	C991889	TW7000 to TW1000B, control cable.
16	1	C991907	PS1000SWA to TW7000, dc power cable.

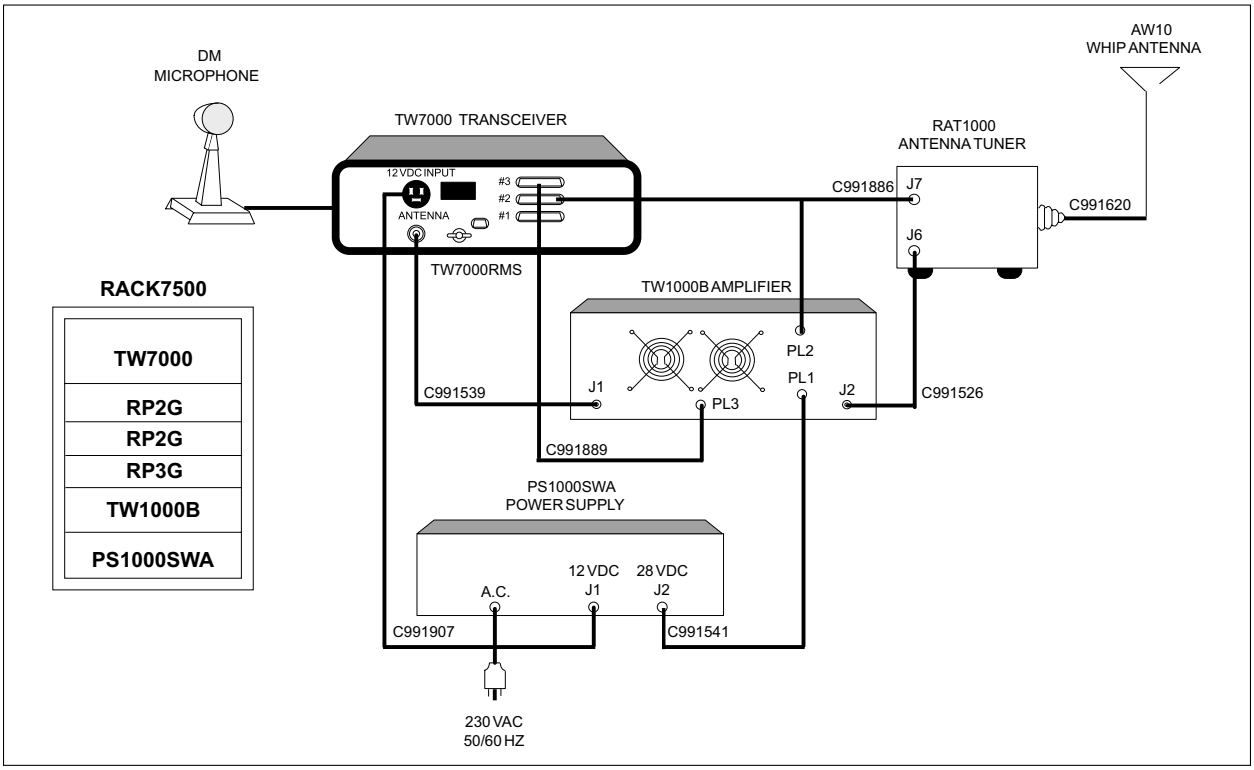

AC/Voice, Broadband Antenna, 1 kW Amplifier, 230 VAC

Item	Quantity Supplied	DWC P/N	Description
1	1	TW7000	Transceiver, HF, 125W, 1.6-30 MHz (receive 100 kHz to 30 MHz). Includes C991829 dc power cable.
2	1	TW1000B	RF amplifier, 1000W, 1.6-30 MHz, including rack mount panel.
3	1	PS1000SWA	Power supply, voice/CW duty, dual 12 Vdc and 28 Vdc output, 230 VAC, 50-60 Hz input.
4	1	ABB1000A	Antenna, broadband, 2-30 MHz, 1000W with 30m coax.
5	1	RACK7500-220	Rack cabinet for TW7500 system, 230 VAC.
6	1	TW7000RMS	Rack mount panel with slides for TW7000.
7	2	RP2G	Blank rack panel, 2 U.
8	1	RP3G	Blank rack panel, 3 U.
9	1	DM	Dynamic desk microphone.
10	1	C991539	TW7000 to TW1000B, RF cable.
11	1	C991541	PS1000SWA to TW1000B, dc power cable.
12	1	C991889	TW7000 to TW1000B, control cable.
13	1	C991907	PS1000SWA to TW7000, dc power cable.
Mast Option			
Add:	1	AMX	Portable antenna mast kit for ABB100A.

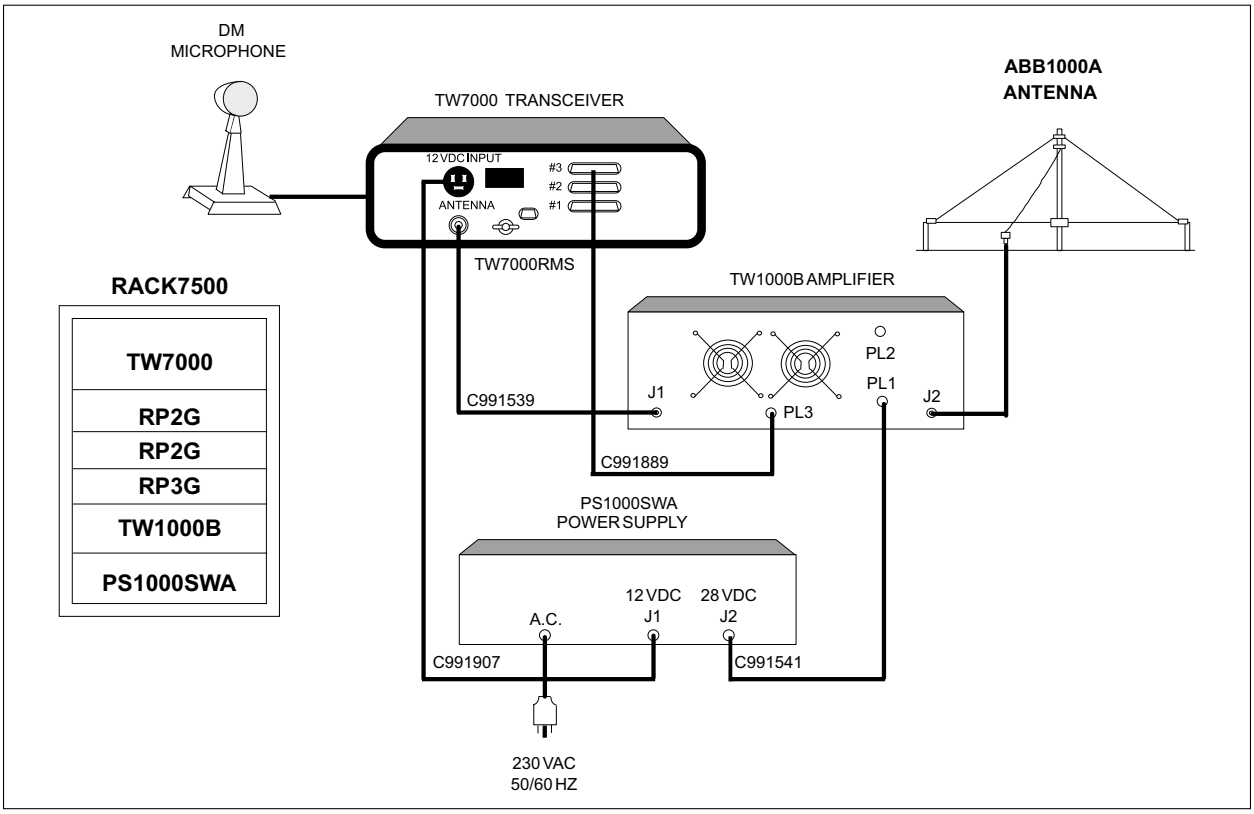

AC/Voice/Data, Antenna Tuner, Whip Antenna, 1 kW Amplifier, 230 VAC

Item	Quantity Supplied	DWC P/N	Description
1	1	TW7000	Transceiver, HF, 125W, 1.6-30 MHz (receive 100 kHz to 30 MHz). Includes C991829 dc power cable.
2	1	TW1000B	RF amplifier, 1000W, 1.6-30 MHz, including rack mount panel.
3	1	PS1000SWA	Power supply, voice/CW duty, dual 12 Vdc and 28 Vdc output, 230 VAC, 50-60 Hz input.
4	1	RAT1000	Antenna tuner, automatic digital, 1000W. Includes C991620 antenna lead.
5	1	AW10	Antenna, whip, 10m, flange mount with side feed.
6	1	TW5300	High-speed HF modem, adaptive ARQ protocol.
7	1	RACK7500-220	Rack cabinet for TW7500 system, 230 VAC.
8	1	TW7000RMS	Rack mount panel with slides for TW7000.
9	2	RP2G	Blank rack panel, 2 U.
10	1	RP3G	Blank rack panel, 3 U.
11	1	DTS	Network software.
12	1	DM	Dynamic desk microphone.
13	1	C991526	TW1000B to RAT1000, RF cable.
14	1	C991539	TW7000 to TW1000B, RF cable.
15	1	C991541	PS1000SWA to TW1000B, dc power cable.
16	1	C991886	TW7000 to RAT1000, control cable.
17	1	C991889	TW7000 to TW1000B, control cable.
18	1	C991907	PS1000SWA to TW7000, dc power cable.
19	1	C992161	TW7000 to TW5300 and computer, Y-cable, series control cable.
ALE Option			
Add:	1	7000ALE	Internal FED-STD-1045A ALE module with controller software.
Antenna Option			
Add:	1	ALW	Antenna, long wire, 75 ft. (replaces AW10).

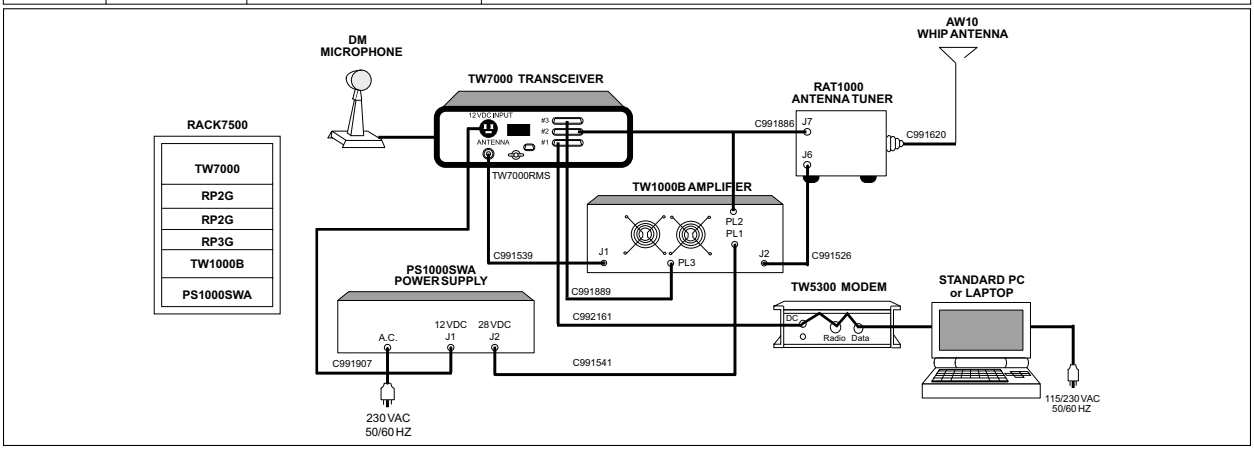

AC/Voice/Data, Broadband Antenna, 1 kW Amplifier, 230 VAC

Item	Quantity Supplied	DWC P/N	Description
1	1	TW7000	Transceiver, HF, 125W, 1.6-30 MHz (receive 100 kHz to 30 MHz). Includes C991829 dc power cable.
2	1	TW1000B	RF amplifier, 1000W, 1.6-30 MHz, including rack mount panel.
3	1	PS1000SWA	Power supply, voice/CW duty, dual 12 Vdc and 28 Vdc output, 230 VAC, 50-60 Hz input.
4	1	ABB1000A	Antenna, broadband, 2-30 MHz, 1000W with 30m coax.
5	1	TW5300	High-speed HF modem, adaptive ARQ protocol.
6	1	RACK7500-220	Rack cabinet for TW7500 system, 230 VAC.
7	1	TW7000RMS	Rack mount panel with slides for TW7000.
8	2	RP2G	Blank rack panel, 2 U.
9	1	RP3G	Blank rack panel, 3 U.
10	1	DTS	Network software.
11	1	DM	Dynamic desk microphone.
12	1	C991539	TW7000 to TW1000B, RF cable.
13	1	C991541	PS1000SWA to TW1000B, dc power cable.
14	1	C991889	TW7000 to TW1000B, control cable.
15	1	C991907	PS1000SWA to TW7000, dc power cable.
16	1	C992161	TW7000 to TW5300 and computer, Y-cable, series control cable.
ALE Option			
Add:	1	7000ALE	Internal FED-STD-1045A ALE module with controller software.

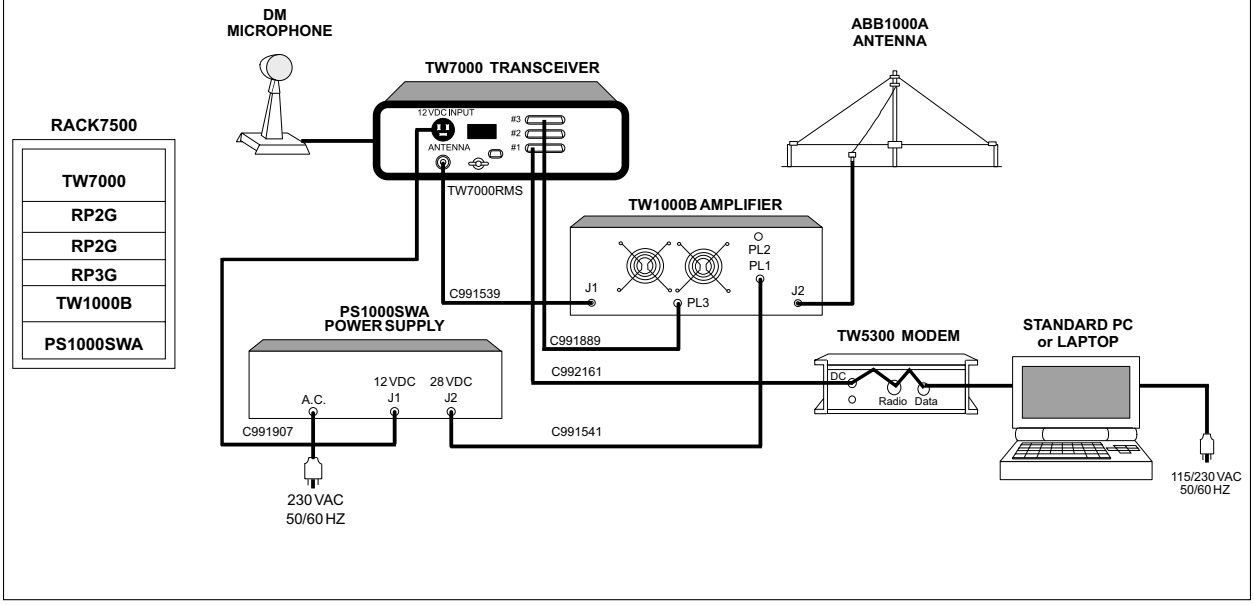

TW7000 TRANSCEIVER CABLES, SPARES, AND MANUALS

Cables for the TW7000

All cables come complete with connectors unless indicated otherwise.

DWC P/N	Description
C991526	UHF connectors, RF, 5m.
C991539	TW7000 to TW500B/TW1000B, RF, 1m.
C991541	PS1000B/PS1000SWA to TW1000B, dc power (28V), 0.6m.
C991552	RAT1000P to RAT1000, control, 5m.
C991620	Antenna tuner, antenna lead-in, 0.5m.
C991689	BNC to PL259, RF, 1m.
C991829	TW7000, dc power, 2m.
C991830	TW7000E to TW7201E, control/power, 5m.
C991879	TW7000 to PF7000, dc power, 1m.
C991886	TW7000 to RAT1000/TW1000B "Y" control, 5m.
C991888	TW7000 to TW500B, control, 1m.
C991889	TW7000 to TW1000B, control, 1m.
C991890	TW7000 to TWPP, dc power, 2m.
C991894	PC to TW7000, control, 1m.
C991897	TW7000 to TW5810, control, 1m.
C991899	TW7000 to TW110A, control, 1m.
C991901	PC to TW5300, data, 2m.
C991906	TW7000 to RAT1000P, control, 1.3m.
C991907	TW7000 to PS1000SWA, dc power (12V), 1m.
C991921	TW7000 to TW7000IOX, control/data/audio, 2m.
C991938	TW7000 to AT7000B, control, 5m.
C991963	TW7000 (ACC2) to PC, data, 2m.
C991964	TW7000 (ACC1) to PC, data, 2m.
C991973	TWPSA, dc power, 2m.
C992017	TWPSA to TW7000, dc power, 1m.
C992018	TWPSA to PF7000, dc power, 1m.
C992020	TW5830 to TWPSA, dc power, 1m.
C992094	TW7000 to TW5850, control, 3m.
C992097	BNC-M to BNC-M, RF, 0.5m.
C992098	C1010 and C1021, control, 0.7m.
C992099	C1010 to TW7000PP, control, 0.5m.
C992100	TW5200, power and control, 1m.
C992114	TW7000 (ACC1) to PC, audio, 1.8m.
C992143	TW5300 to TW7000, 2m.
C992161	TW7000-TW5300 to PC, control, Y-cable, 2m.
C992162	TW5300 to TW7000 (ACC2) to PC, audio/data 1.5m.
C992201	PC to TW110A, control, 2m.
C992202	PC to TW110A, data, 2m.
C992307	TW7000 to remote control head, 10m.
C992309	TW7000 unterminated cable, specify length.

Note: Standard length of each cable is indicated in cable description. To order nonstandard cable lengths, contact your Datron Representative.

Spares Kits for the TW7000

DWC Product	Module Kit (MK)	Module Repair Kit (MRK)	Parts Spare Kit (PSK)	Surface Mount Repair Kit (SMRK)
AT7000B	✓	✓	✓	
PF7000			✓	
PS1000B			✓	
PS1000SWA			✓	
RAT1000	✓	✓	✓	
TW1000B	✓	✓	✓	
TW500B	✓	✓	✓	
TW5810	✓	✓	✓	
TW5830	✓	✓	✓	
TW5850	✓	✓	✓	
TW5880	✓	✓	✓	
TW7000	✓	✓	✓	✓
TW7000RX	✓	✓	✓	✓
TW7000TX	✓	✓	✓	✓
TW7201E	✓	✓	✓	✓
TW7201F	✓	✓	✓	✓
TW7201I	✓	✓	✓	✓

Note: To order an individual spares kit, add the appropriate suffix (i.e., -MK, -MRK, -PSK, -SMRK) to the product part number. For a complete list of Module Kit, Module Repair Kit, and Parts Spares Kit, see the Spares section.

Spare Module Assemblies for the TW7000

When ordering spare module assemblies specify module and serial number of equipment.

DWC P/N	Description
001-00110	Front Panel Switchboard, TW7000
001-00120	Front Panel LCD, TW7000
001-00130	Front Panel Keypad Assembly, TW7000
001-00143	Front Panel Processor, TW7000
001-00201	VSWR DET PC, TW7000
001-00203	Reference Control Assembly, RT7000
001-00310	Power Amplifier, TW7000
001-00320	Filter Assembly, TW7000
001-00400	Power Supply Assembly, TW7000
001-00600	Audio Module, TW7000
001-00710	75 MHz IF Module, TW7000
001-00800	5 MHz IF Module, TW7000
001-00901	Synthesizer Module, TW7000
001-01021	High Stability Module, TW7000
001-01100	Processor Assembly, TW7000
001-01200	Squelch Assembly, TW7000
7000ACH	1000 Memory Channel Option
7000ALE	ALE Option Module
7000ENCR	Encryption Option Module
7000HS	High Stability Option Module
7000NB	Noise Blanker Option Module
7000RF	RCU FSK Option Module
7000RI	RCU ISDN Option Module
7000RS	RS422/423/485 Option Module
7000VEM	DSP Voice Enhancement Module
7000WB1	WB Data Filter Option Module
TW1000BMOD	TW1000B Amplifier Assembly

Note: For information on spare subassemblies not listed, contact your Datron Representative.

Maintenance Kits for the TW7000

TW7000TK
Tool kit for the TW7000, includes card puller.

SMTRK
Surface mount technology tool kit consisting of a master unit and various handpieces for a wide range of surface mount and through-hole repair capability. Available for 115 VAC 50/60 Hz or 230 VAC 50 Hz. Specify ac operating voltage when ordering.

7000EXT
Extender board kit includes extender boards and card puller.

Manuals for the TW7000

DWC P/N	**Operator** (supplied with unit)	**Technical** (order separately)	**Operator/Technical** (supplied with unit)
ABB1000-MS			✓
ABB100-MS			✓
AD-MS			✓
AMX-MS			✓
PS1000SWA-MS			✓
RAT1000-MS			✓
TW500B-MS			✓
TW5810-MS			✓
TW5850-MS			✓
TW7000MS		✓	
TW7000-MSOP			✓
TW7201F-MS		✓	
TW7201F-MSOP			✓
TW7201I-MS		✓	
TW7201I-MSOP			✓

Note: For a detailed list of Datron documentation, see the Manual section. For system documentation, contact your Datron Representative.

TW7000F HF TRANSCEIVER

- 1.6 MHz-30 MHz (receive 100 kHz-30 MHz)
- 125W PEP/100W Average
- High-Level Encryption
- Built-in Remoteable Control Panel and Deployable Automatic Antenna Tuner
- Complete Portable Package
- Optional Transmitter and Receiver
- Dual Antenna and Audio Connectors Plus Military Handset Connector
- Fail-Safe Input Power Protection
- Alphanumeric LCD
- BITE Capability
- Multi-Protocol Remote Control Capabilities
- Dual ALE Capability

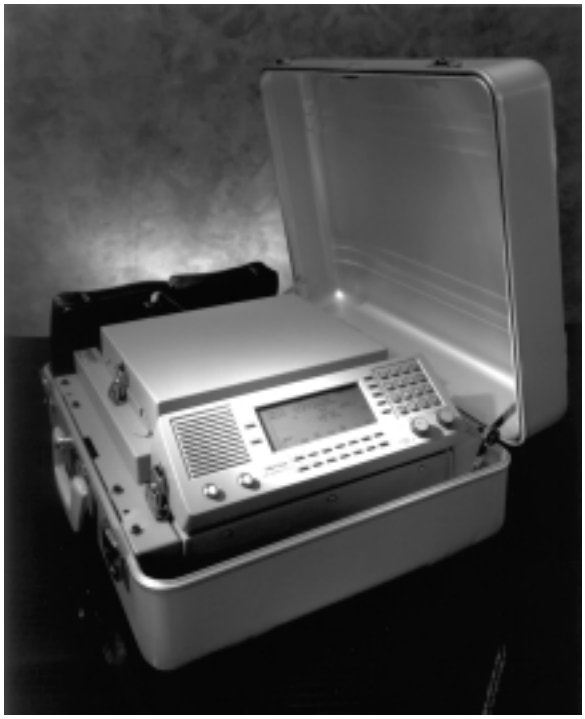

TW7000F Transceivers

SSB/FSK synthesized 1.6-30 MHz HF transceiver, (receive 100 kHz-30 MHz), 125W PEP/100W average, USB, LSB, CW, PCS, and AME modes are standard. Simplex and semi-duplex, continuous coverage in 10 Hz steps, and keypad programmable, nonvolatile storage on 256 channels (optional up to 1000). Self contained ac power supply, auto ranging, switching mode (AC input 90-260V, 50-70 Hz), also includes 12 Vdc input connector/cable. Built-in remote control panel and deployable automatic antenna tuner with 100 channel memory. Contains thermostatically controlled cooling fan. System mounted in a rugged aluminum carrying case. Supplied with wire antenna (two sections), ground strap with clip, military handset, universal ac power connector kit, dc power cable with clips, ac power cable and operator manual. Includes 25 ft. of coaxial and control cable for the tuner (C991706 and C991945).

Supplied with operator manual and listed interface cables. Order technical manual separately.

Options for the TW7000F

Prices include factory installation at the time the radio is ordered. For field installation, contact your Datron Representative.

7000ACH
Additional channels. Increases operational channels up to 1000.

7000ALE
FED-STD-1045A ALE module provides fully compatible system for ALE operations, including high-speed scanning, sounding, link quality analysis, and send/receive orderwire message capability. Provides selective calling as well as "best available frequency" selection. Use external computer running Datron's 9000RAD software or alphanumeric keypad of radio for orderwire message composition. Custom LCD provides alphanumeric display of message. Includes real time clock option (7000CLK).

7000ENCR
Encryption module provides high-level digital encryption of voice. Compatible with TCC 9000-series. For information on the Key Management system, contact your Datron Representative.

Note: U.S. State Department export license is required for shipment of the 7000ENCR outside of the United States.

7000HS
High-stability TCXO. Provides frequency stability of ±0.1 PPM.

Note: The 7000HS option is recommended for high-speed data use (MIL-110A modem) and for use with ALE (7000ALE).

7000NB
Impulse-type noise blanker. For use in high noise environments.

7000RF
FSK modem assembly for the TW7000 radio and TW7201F remote control.

7000RI
ISDN modem assembly for the TW7000 radio and TW7201I remote control.

7000RS
RS422/423/485 input/output configures second serial port to provide data protocol specified by the user for external control of radio via computer. Format choice must be included with order. This option is in addition to the RS232 interface included as a standard feature with the TW7000.

7000TC
Provides all functions of Transcall, Selcall and TransAdapt. Selcall offers digital selective calling. Provides calling of selected station with automatic answerback and alarm. Selective calling stops scan. Transcall offers automatic path evaluation within selected multiple scan groups (ten channels suggested maximum per scan group). Establishes contact on "best available frequency," with automatic alarm. An external alarm signal is available for both TC and SC operation. TransAdapt offers automatic path evaluation based on "first acceptable frequency." Compatible with PRC1099 TransAdapt units.

7000VEM
DSP-based voice enhancement module. Reduces effects of various types of noise and interference on voice transmissions.

7000WB1
Wide-band/data filter. Provides 300-3300 Hz (-4 dB) data filter with tailored group delay; USB/LSB. Recommended for high-speed data use (TW110A). STANAG 4285 compliant.

Portable Power Supply for the TW7000F

TWPP
Power source; 13.6 Vdc, 25 Ah. Portable power source in a rugged aluminum suitcase with complete 115/230 VAC battery charger. Supplies all TW7000-series transceivers for approximately 24 hours under typical SSB operating conditions. Supplied with C991890 dc power cable.

Fixed/Portable Broadband Antennas for the TW7000F

Antenna mast not included unless specified.

ABB100A
Broadband antenna 2-30 MHz, 125W, supplied with 30m RG213 coaxial cable and PL-259 (UHF) connector. Extended length model for increased efficiency in 2-10 MHz range. (Antenna length is 43.3m.)

ABB100B
Broadband antenna 2-30 MHz, 125W, supplied with 30m RG213 coaxial cable and PL-259 (UHF) connector. (Antenna length is 34.1m.)

AMX
Portable antenna mast kit for ABB100 and ABB1000-series antennas. Includes 15m of mast sections, guy rings, dacron rope guys, guy stakes, mast base, raising halyard rope, and pulley supplied in canvas carrying bag with guy hammer.

CX
Coaxial cable RG213 for cable lengths over 30m. Specify length and add additional cost of cable (RG213).

Untuned Antennas for the TW7000F

These antennas require an antenna tuner.

AWM
Mobile whip, insulator, heavy-duty spring and base (2.7m).

AW7
Side-feed whip, flange mount (7m).

AW10
Side-feed whip, flange mount (10.5m).

ALW
Long-wire antenna kit. Includes 23m of antenna wire, 15m of hang-up rope, and two insulators.

Remote Control for the TW7000F

TW7201F
Full remote control (FSK). Full function Remote Control Unit (RCU) using FSK signaling format. Supports all transceiver functions and options. Includes internal speaker and ac power supply (115/230 VAC), or power from 12 Vdc. Distance doubled by loss in cable (approximate maximum signal loss -20 dB). Order C992307 control cable separately. If unterminated cables are required, order C992309 (specify length). Radio must have 7000RF card installed.

TW7201I
Full remote control (ISDN). Same as the TW7201F, except it uses ISDN signaling format. Provides real-time operation transparent to the operator. Link contains a spare 9600 bps serial channel. Requires a 2-wire link maximum range of 2 km. Order C992307 control cable separately. If unterminated cables are required, order C992309 (specify length). Radio must have 7000RI installed.

Telephone Coupler for the TW7000F

Supplied less interface cable. Order cable as indicated.

TW5850
Desktop coupler provides interface between the transceiver or other 600 ohm audio system and the telephone line using DSP (Digital Signal Processing) technology. 12 Vdc operating voltage obtained from the TW7000. Order C991897 interface cable.

Audio Accessories for the TW7000F

Supplied with connectors for TW7000F.

PM
Heavy-duty hand microphone.

DM
Dynamic desk microphone.

KEY
Morse key.

EP
Headphones.

EPL
Lightweight headphones.

MHS
Military Handset.

Amplifiers for the TW7000F

TW500B-RMS
High-power amplifier 1.6-30.0 MHz, 500W PEP (voice), 19 inch rack mount, internal 115/230 VAC, 50/60 Hz power supply. Automatic selection of filters when used with TW7000 transceivers. Includes SWR1000 VSWR bridge. Order C991888 control cable and C991539 RF cable. Specify ac voltage when ordering. Specify use as voice only or voice/FSK continuous duty.

TW500B-S
High-power amplifier 1.6-30.0 MHz, 500W PEP (voice), internal 115/230 VAC, 50/60 Hz power supply. Automatic selection of filters when used with TW7000 transceivers. Includes SWR1000 VSWR bridge. Order C991888 control cable and C991539 RF cable. Specify ac voltage when ordering. Specify use as voice only or voice/FSK continuous duty.

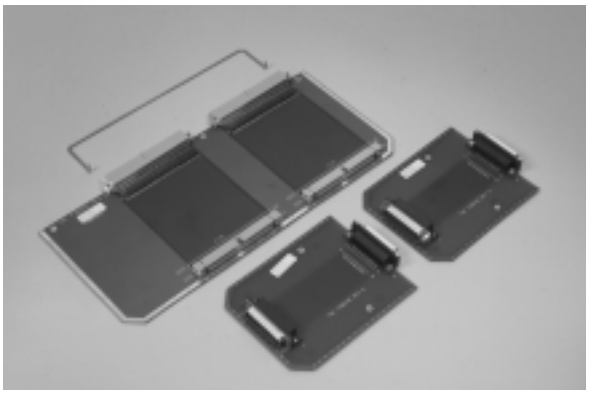

Miscellaneous Options and Accessories for the TW7000F

7000EXT
Extender board kit, includes extender boards and card puller.

SMTRK
Surface mount technology tool kit consisting of a master unit and various handpieces for a wide range of surface mount and through-hole repair capability. Available for 115 VAC 50-60 Hz or 230 VAC 50 Hz. Specify input power requirements with order.

TW7000FACC
Spare accessory kit for the TW7000F (fuses, handset, cables, antenna, ground strap, universal power connector kit and nylon cord).

TW7000FTK
Basic tool/repair kit with carrying case.

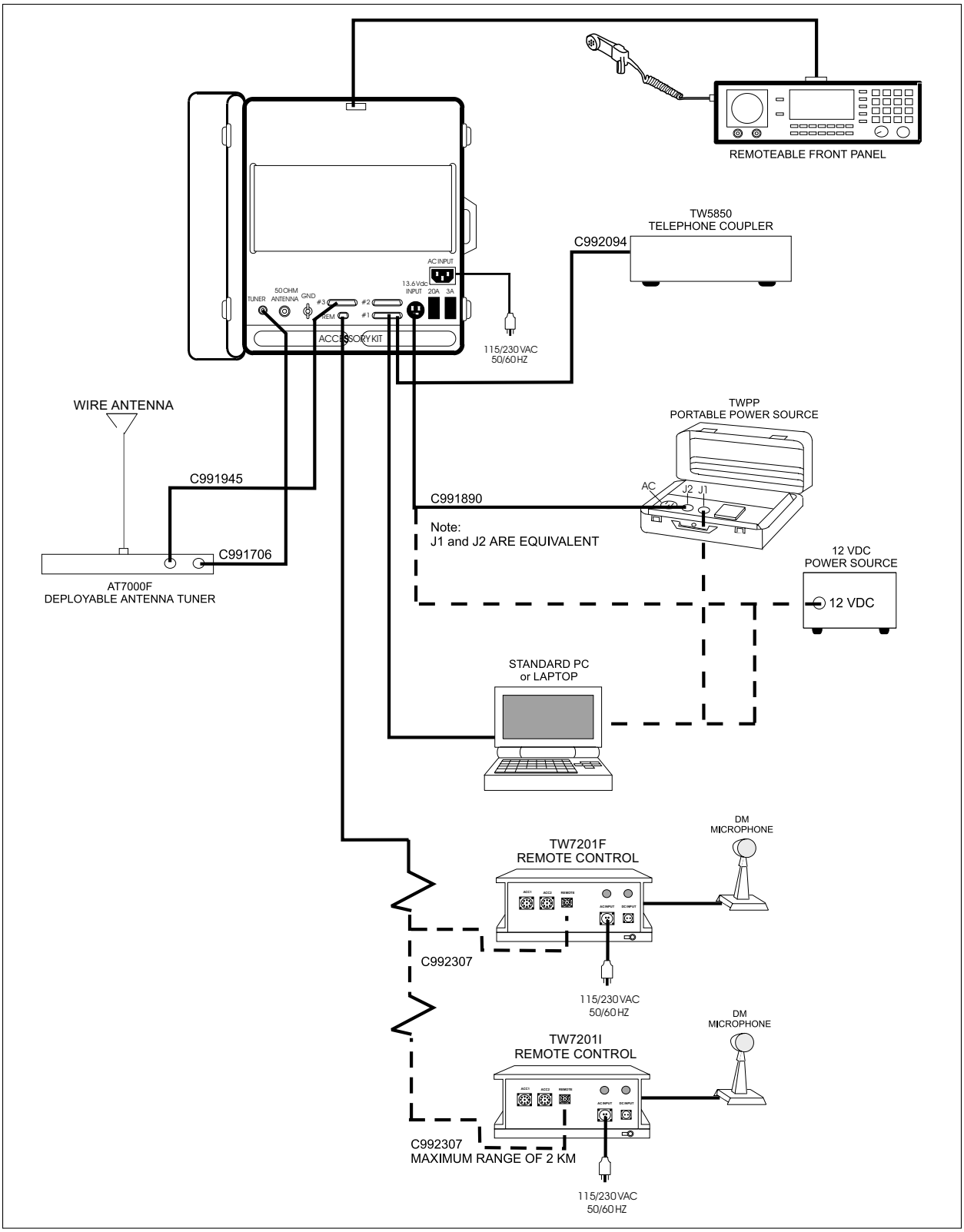

TW7000F and Accessories

AC/Voice, Broadband Antenna

Item	Quantity Supplied	DWC P/N	Description
1	1	TW7000F	"Fly-away" transceiver, HF, 125W PEP/100W average., 1.6-30 MHz (receive 100 kHz to 30 MHz), with internal auto-ranging ac power supply, 115/230 VAC, 50-60 Hz input, includes AT7000F deployable antenna tuner, a remoteable front panel, and a MHS military style handset. Includes C991706 dc power/signal cable and C991945 data cable.
2	1	ABB1000A	Antenna, broadband, 2-30 MHz, 1000W with 30m coax.
ALE Option			
Add:	1	7000ALE	Internal FED-STD-1045A ALE module with controller software.

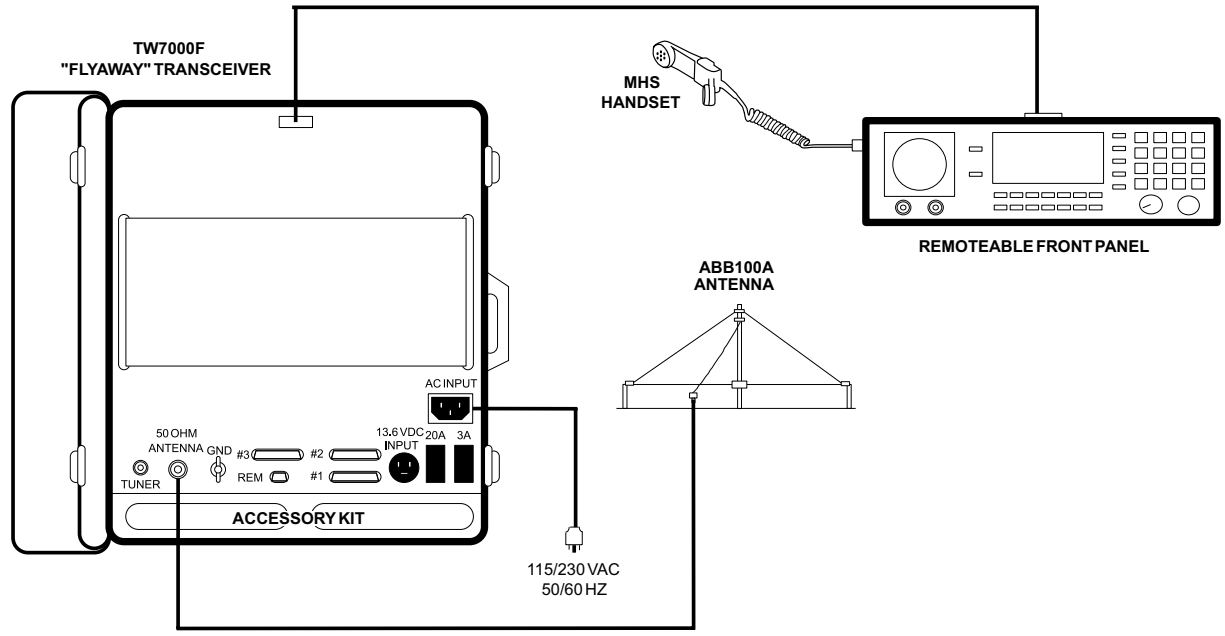

Dc/Portable/Voice, Antenna Tuner, Wire Antenna

Item	Quantity Supplied	DWC P/N	Description
1	1	TW7000F	"Fly-away" transceiver, HF, 125W PEP/100W average., 1.6-30 MHz (receive 100 kHz to 30 MHz), with internal auto-ranging ac power supply, 115/230 VAC, 50-60 Hz input, includes AT7000F deployable antenna tuner, a remoteable front panel, and a MHS military style handset. Includes C991706 dc power/signal cable and C991945 data cable.
2	1	TWPP	Self-contained portable power source, 13.6 Vdc, 25 Ah, 115/230 VAC, 50-60 Hz input, built-in battery charger.
3	1	ABB1000A	Antenna, broadband, 2-30 MHz, 1000W with 30m coax.
ALE Option			
Add:	1	7000ALE	Internal FED-STD-1045A ALE module with controller software.

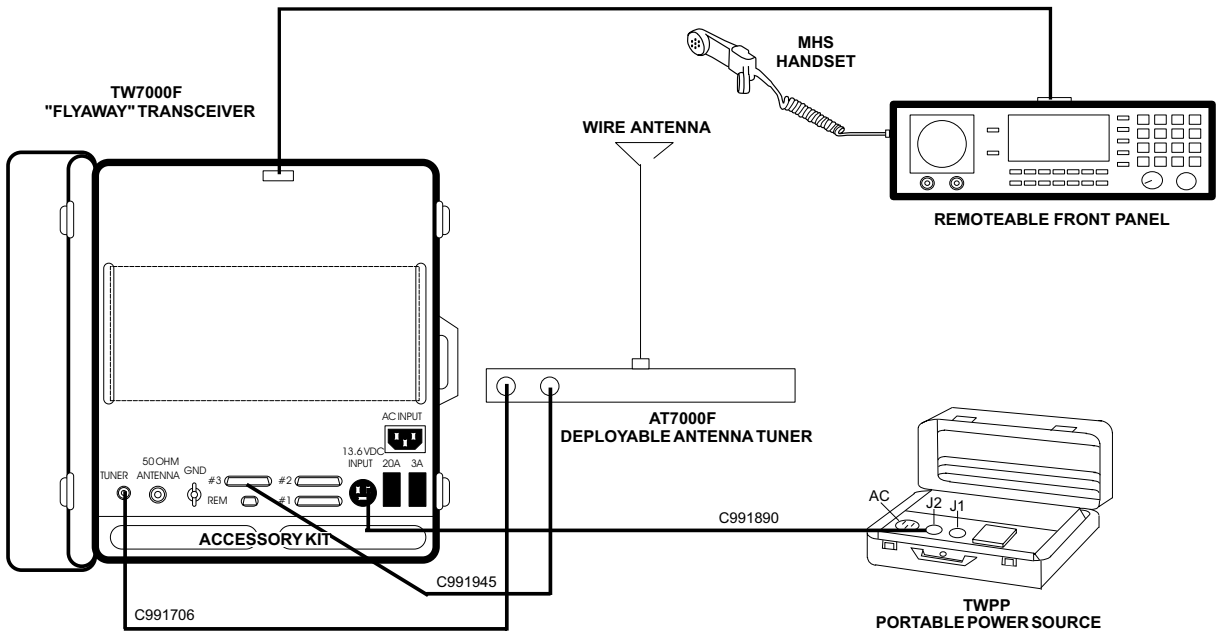

AC/Voice/Data, Antenna Tuner, Wire Antenna

Item	Quantity Supplied	DWC P/N	Description
1	1	TW7000F	"Fly-away" transceiver, HF, 125W PEP/100W average., 1.6-30 MHz (receive 100 kHz to 30 MHz), with internal auto-ranging ac power supply, 115/230 VAC, 50-60 Hz input, includes AT7000F deployable antenna tuner, a remoteable front panel, and a MHS military style handset. Includes C991706 dc power/signal cable and C991945 data cable.
2	1	TW5300	High-speed HF modem, adaptive ARQ protocol.
3	1	DTS	Network software.
4	1	C992161	TW7000F to TW5300 and computer, Y-cable, series control cable.
ALE Option			
Add:	1	7000ALE	Internal FED-STD-1045A ALE module with controller software.
Power Pack Option			
	1	TWPP	Self-contained portable power source, 13.6 Vdc, 25 Ah, 115/230 VAC, 50-60 Hz input, built-in battery charger. Includes C991890 dc power cable.

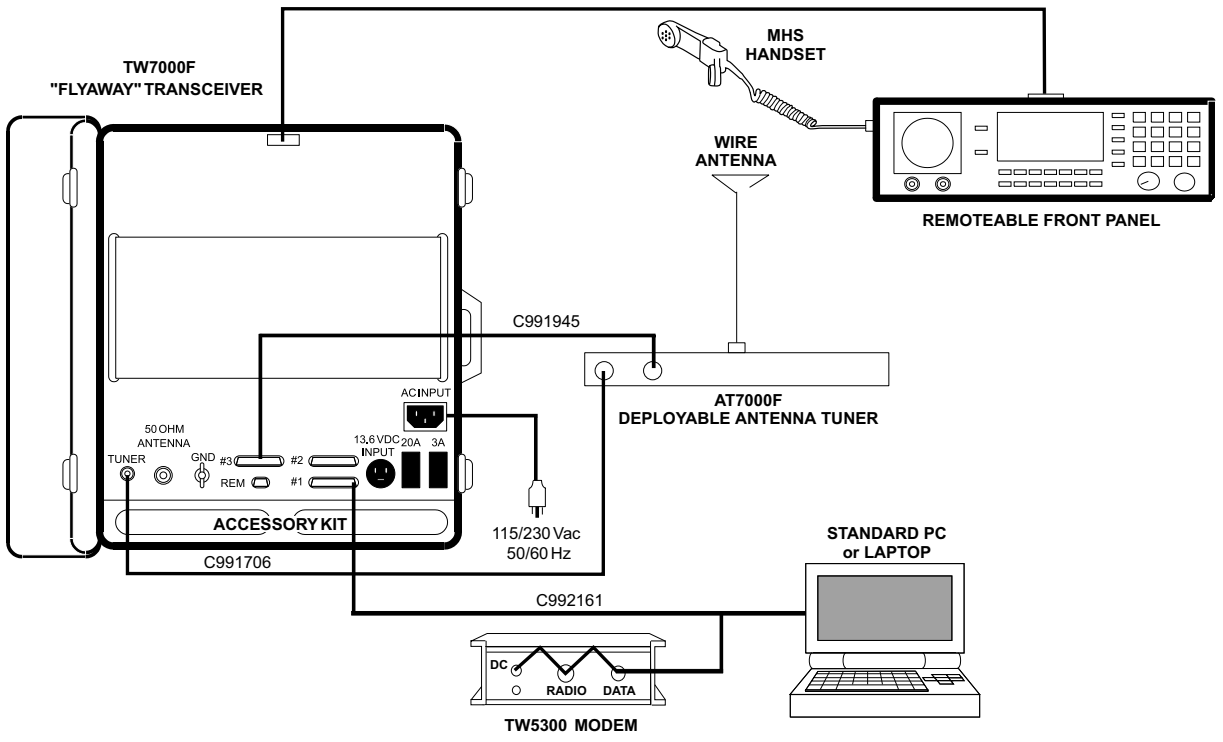

AC/Voice/Data, Broadband Antenna

Item	Quantity Supplied	DWC P/N	Description
1	1	TW7000F	"Fly-away" transceiver, HF, 125W PEP/100W average., 1.6-30 MHz (receive 100 kHz to 30 MHz), with internal auto-ranging ac power supply, 115/230 VAC, 50-60 Hz input, includes AT7000F deployable antenna tuner, a remoteable front panel, and a MHS military style handset. Includes C991706 dc power/signal cable and C991945 data cable.
2	1	TW5300	High-speed HF modem, adaptive ARQ protocol.
3	1	ABB1000A	Antenna, broadband, 2-30 MHz, 1000W with 30m coax.
4	1	C992161	TW7000F to TW5300 and computer, Y-cable, series control cable.
ALE Option			
Add:	1	7000ALE	Internal FED-STD-1045A ALE module with controller software.
Power Pack Option			
Add:	1	TWPP	Self-contained portable power source, 13.6 Vdc, 25 Ah, 115/230 VAC, 50-60 Hz input, built-in battery charger. Includes C991890 dc power cable.

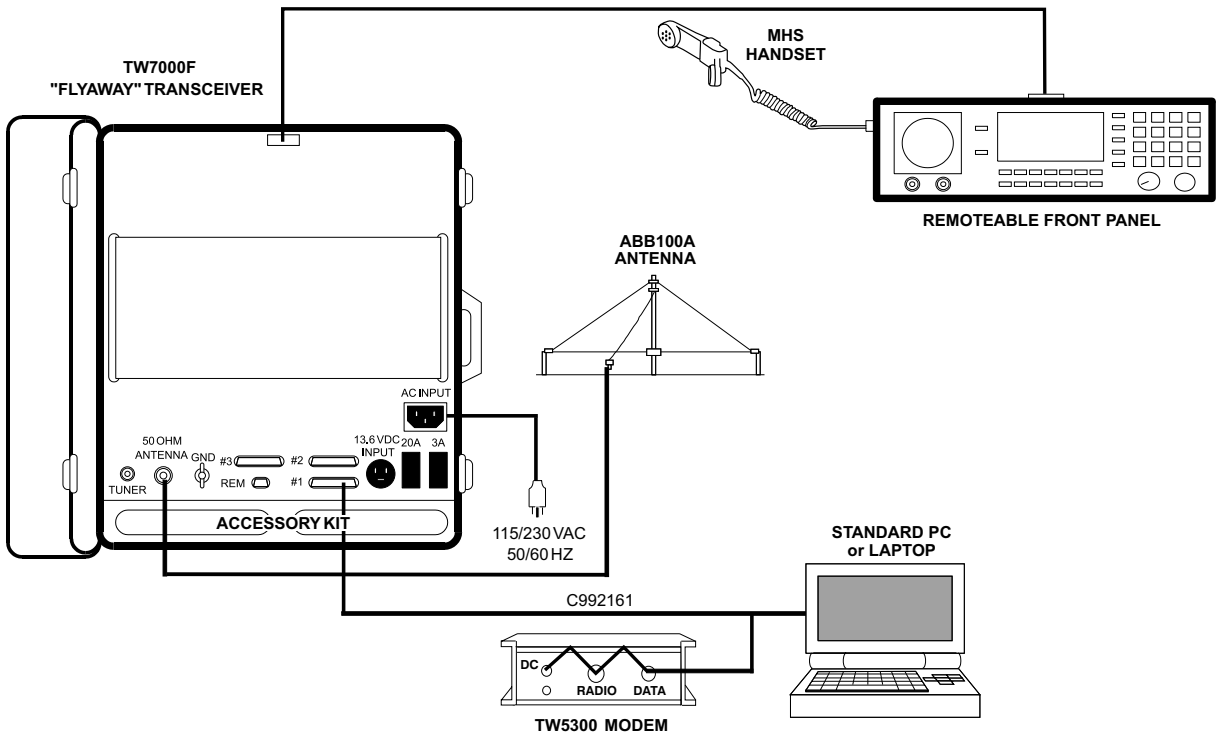

Cables for the TW7000F

All cables come complete with connectors unless indicated otherwise.

DWC P/N	Description
C991535	TW7000 to AT7000B, RF, 5m.
C991706	TW7000F to AT7000F, dc power, 7.6m.
C991829	TW7000, dc power, 2m.
C991890	TW7000 to TWPP, dc power, 2m.
C991897	TW7000 to TW5810, control, 1m.
C991945	TW7000F to AT7000F, data, 7.6m.
C992094	TW7000 to TW5850, control, 3m.
C992161	TW7000-TW5300 to PC-series, control, Y-cable, 2m.
C992307	TW7000 to remote control head, 10m.
C992309	TW7000 unterminated cable, specify length.

Note: Standard length of each cable is indicated in cable description. To order nonstandard cable lengths, contact your Datron Representative.

Spare Module Assemblies for the TW7000F

When ordering spare module assemblies specify module and serial number of equipment.

DWC P/N	Description
001-00110	Front Panel Switchboard, TW7000F
001-00120	Front Panel LCD, TW7000F
001-00143	Front Panel Processor, TW7000F
001-00201	VSWR DET PC, TW7000F
001-00310	Power Amplifier, TW7000F
001-00320	Filter Assembly, TW7000F
001-00400	Power Supply Assembly, TW7000F
001-00600	Audio Module, TW7000F
001-00710	75 MHz IF Module, TW7000F
001-00800	5 MHz IF Module, TW7000F
001-00901	Synthesizer Module, TW7000F
001-01000	Ref/Control Module, TW7000F
001-01100	Processor Assembly, TW7000F
001-01200	Squelch Assembly, TW7000F
002-01003	Connector Assembly, TW7000F
003-00002	AT7000F Assembly, TW7000F
003-01003	Connector Assembly, TW7000F
7000ACH	1000 Memory Channel Option
7000ALE	ALE Option Module
7000ENCR	Encryption Option Module
7000HS	High Stability Option Module
7000NB	Noise Blanker Option Module
7000RF	RCU FSK Option Module
7000RI	RCU ISDN Option Module
7000RS	RS422/423/485 Option Module
7000VEM	DSP Voice Enhancement Module
7000WB1	WB Data Filter Option Module
702107	Power Supply Assembly, TW7000F

Note: For information on spare subassemblies not listed, contact your Datron Representative.

Spares Kits for the TW7000F

DWC Product	Module Kit (MK)	Module Repair Kit (MRK)	Parts Spare Kit (PSK)	Surface Mount Repair Kit (SMRK)
PS9000			✓	
RAT1000	✓	✓	✓	
TW500B	✓	✓	✓	
TW7000F	✓	✓	✓	✓
TW7201F	✓	✓	✓	
TW7201I	✓	✓	✓	
TWPP	✓	✓	✓	
TWPSA			✓	

Note: To order an individual spares kit, add the appropriate suffix (i.e., -MK, -MRK, -PSK, -SMRK) to the product part number. For a complete list of Module Kit, Module Repair Kit, and Parts Spares Kit, see the Spares section.

Manuals for the TW7000F

DWC P/N	Operator (supplied with unit)	Technical (order separately)	Operator/Technical (supplied with unit)
ABB100-MS			✓
AD-MS			✓
AMX-MS			✓
RAT1000-MS		✓	
RAT1000-MSOP	✓		
TW500B-MS			✓
TW7000F-MS		✓	
TW7000F-MSOP			✓
TW7201-MS		✓	
TW7201-MSOP			✓
TWPP-MS			✓
TWPSA-MS			✓

Note: For a detailed list of Datron documentation, see the Manual section. For system documentation, contact your Datron Representative.

DATA COMMUNICATION PRODUCTS

- High-Speed HF Modems
- Rugged Data Radio
- Embedded and Stand-alone Systems
- Network Management Software Packages
- Point-to-Point and Complex Network Configurations
- Fax, Image, E-mail System
- Automatic Message Relay
- Adaptive, ARQ Protocols

Data communication is rapidly overtaking voice as the major user requirement in a significant number of world markets. Datron can address customer data communication needs with a proactive systems approach that offers detailed configurations that are cost-effective, easy to implement, and technically responsive.

A broad selection of data products is available from Datron. The 5200-series modems more than adequately service the user requiring a robust data system at a very affordable cost. The 5300-series modems offer additional features and are designed for users requiring substantially higher data rates and error correction capabilities. A powerful network software program, DTS-Gateway, permits creation and management of complex data networks including access to LANs and HF e-mail capability. Designed for the military user, the 110A-series modems and the new RT7110 data transceiver provide full MIL-STD-188-110A data capability; see the RT7000 HF Transceiver section. All modem products are offered in both commercial and ruggedized packages.

Datron offers data packages incorporating the 7000-series HF radio for use with any standard PC or laptop. Equipment can be located on a desktop, rack-mounted, or shock mounted in vehicles. Software packages are available that provide a complementary adaptive ARQ protocol for data transfer and a means for controlling an associated Datron 7000-series radio.

5200-Series Modems

Datron's 5200 is a low-speed data modem featuring RTTY, SITOR, (ARQ, FEC, SELFEC), ASCII, PACTOR (ARQ and FEC), X-TOR (ARQ), NAVTEX-RX, HF-PACKET (AX.25) and CW Modes. It can operate simultaneously on HF and VHF with crossmode and common mailbox capabilities. It operates at speeds up to a maximum of 300 bps using X-TOR. The 5200 has an RS232 interface to any XT, AT, 386, 486, or pentium computer. It comes complete with the DTWIN data communications software package.

RT5200

The RT5200 is a stand-alone modem packaged in a rugged waterproof case. It comes with MIL-SPEC connectors and a shock mount. Designed to be powered from +12 Vdc. The input power can be provided from an attached RT7000 (ACC1 connector) using control cable C992052 (must be ordered separately).

TW5200

Electrically identical to the RT5200. Packaged as a compact, desktop unit designed for general purpose usage. +12 Vdc primary power can be provided from an attached TW7000 (ACC1 connector) using control cable C992100 (must be ordered separately).

5300-Series Modems

Datron's 5300 is an advanced digital modem using a waveform and protocol (X-Clover) specially designed to provide reliable high-speed data transfer using standard HF radio equipment. The 5300 is offered in three different versions depending on the system configuration. These configurations are described below.

All versions of the modem come with a DOS-based communications software package that can be used in a point-to-point system to send data messages. The 5300 can also be used in conjunction with Datron's DTS-Gateway software to allow data transmission, message store and forward, chat and broadcast modes, and other networking functions. It is capable of delivering error-corrected and uncompressed data, including all overhead, over a HF channel at over 2000 bits per second (3000 bps uncompressed, raw throughput).

5300 modems use a selective, 2-level, bi-directional, ARQ protocol. All transmitted data is encoded using one of four levels of Reed-Solomon error correction coding. Only those packets that cannot be fixed with the Reed-Solomon coding are repeated.

E5300

The E5300 is a printed circuit card suitable for embedding in a full-size personal computer. It performs like the RT5300 except the operator must manually switch between X-Clover and TOR modes. Includes DOS-based file transfer program.

RT5300

The RT5300 is a stand-alone modem that can be used with any data terminal, including laptop and non-IBM PC terminals. It is packaged in a rugged, waterproof case for use in harsh environments. The RT5300 can operate in either the high-speed X-Clover mode or the traditional "TOR" modes (SITOR, PACTOR, etc.). Powered from +12 Vdc source. Input power can be provided from an attached RT7000 (ACC1 connector) using control cable C992060 (must be ordered separately). Includes DOS-based file transfer program.

TW5300
The TW5300 possesses the same electrical characteristics as the RT5300, but it is packaged in a compact, desktop unit designed for general purpose usage in a communications shelter or base station. +12 Vdc primary power can be provided from an attached TW7000 (ACC1 connector) using control cable C992143 (must be ordered separately).

Note: If a customer requires an embedded PC-card modem that has automatic switch-over to TOR operating modes, contact your Datron Representative.

TW5300F
Datron's TW5300F Fax/Radio Interface integrates a high-speed HF modem and standard fax machine interface circuitry to provide, in a single package, a complete interface between a standard G3 facsimile machine and an HF radio. The local fax machine is connected directly to the TW5300F, which in turn is connected to the HF radio. This allows a user to easily and efficiently send fax messages between two points. The fact that an HF radio system is part of the communications link is transparent to the operator. Once the fax machine and the HF radio are properly connected to the TW5300F, sending a fax is simple.

The TW5300F can be used in a system including a standard G3 fax machine and a 7000-series HF transceiver. This easy-to-use fax-over-HF system is transparent to the user. System diagrams are shown later in this section.

110A-Series Modems

The 110A-series modems are specially designed for high-speed HF communications. They feature MIL-STD-188-110A serial tone (PSK) operation at data rates up to 2400 bps error-corrected, and 4800 bps without error-correction. Also available is an FSK mode with data rates from 50 to 1200 bps.

RT110A-12
Comes in a rugged waterproof case and is powered from +12 Vdc.

RT110A-24
Identical to the RT110A-12 except powered from +24 Vdc.

TW110A
Comes in a compact unit designed for desktop or rack mounting. Powered from 115/230 VAC, 50/60 Hz.

Modem Accessories

Shock mounts are available to isolate the equipment from high-impact shock and vibration. The equipment is retained in the mount using four or six quick-detach military-type butterfly clamps. Four separate military-type, heavy-duty shock absorbers are used in each mount.

RT110A-SM
Shock mount for RT110A-12 or RT110A-24.

RT5200SM
Shock mount for RT5200.

RT5300-SM
Shock mount for RT5300.

Rack mount kits are available for mounting the data modems in a standard 19" rack. For exact requirements, contact your Datron Representative.

Software Packages for Data Communication

A line of software packages for point-to-point data transfer, network configuration and control, and transceiver setup and control are offered.

9000RAD

Radio control software that operates on a standard computer in a Windows environment. Used to configure radio and ALE parameters for 7000-series and 1099A-series transceivers. Features complete setup of channel frequencies, scan groups, AMD message transfer, and storage. One computer COM port is required.

9000RAD-SP

Spanish version of the 9000RAD software.

DTS-Gateway

The DTS-Gateway program is a powerful network software package that can be used for network administration (configuring a complex data network), over-the-air data transmission, message store and forward, chat and broadcast modes, and other networking functions. The user screens are conveniently arranged into configuration menus that are normally used by a network administrator, and communication menus that provide the user-friendly operator interface.

DTS-Gateway integrates radio and network control and message handling tasks into one, simple-to-use system. It is specially configured to coordinate the operation of a Datron 7000-series transceiver, 5300-series modem, and companion data terminal. Messages may be entered by the operator via the keyboard, disk, serial interface or optional LAN interface. DTS-Gateway can be used for both station-to-station and station-to-multi-station operation. The primary application for DTS-Gateway, however, is in a station that must fulfill network gateway functions, as it allows access to the Internet, a fax modem, and e-mail services. A proprietary automatic link establishment system (ALE) included in the program allows automatic selection of the best frequency of operation for the communication link. One computer COM port is required to support both radio and modem control.

DTS-Gateway is just one of four network software packages that Datron offers. Each packaged is optimized for use in different types of networks, or at different locations in the same network. Later in this section are block diagrams that illustrate possible network configurations using the different versions of the DTS software program. The network software packages (in addition to DTS-Gateway) that are available include:

- DTS Light
- DTS Mail
- DTS Packet

DTS Light

DTS Light is a variant of DTS-Gateway designed to send radio traffic only. DTS Light stations can communicate with each other or a Gateway station. They can send traffic to a Gateway for retransmission via other media, but the relay is manual and not automatic. They cannot be connected to a LAN, e-mail program, or fax machine; no “cross-platform” traffic is permitted; only radio communications is possible.

DTS Mail

DTS Mail is a variant of DTS-Gateway designed to communicate only to or through a DTS-Gateway station. DTS Mail stations cannot talk to each other. They can, however, be connected to LANs, and can originate Internet, e-mail, fax and relay traffic.

DTS Packet

DTS Packet is a version of DTS designed to work with VHF radio systems in a packet mode. It interfaces directly with DTS-Gateway and, may be on the same terminal with it to allow message forwarding between them. Neither DTS Mail nor DTS Light can interface to DTS Packet for message routing; they are “end points” only.

DTWIN

DTWIN is a customized Datron data transmission software package designed to function exclusively with the RT5200, TW5200, and E5200 Modem-series. It is included with every 5200 Modem. It operates in a Windows environment and permits simultaneous HF/VHF operation.

HFCOM2

Data communications software designed to work with 7000-series transceivers and 110A-series modems. Operates on a standard computer in a Windows environment. Allows setup of modem configuration parameters and binary and text file transfers over associated HF radio. Three computer COM ports are required to support both radio and modem control.

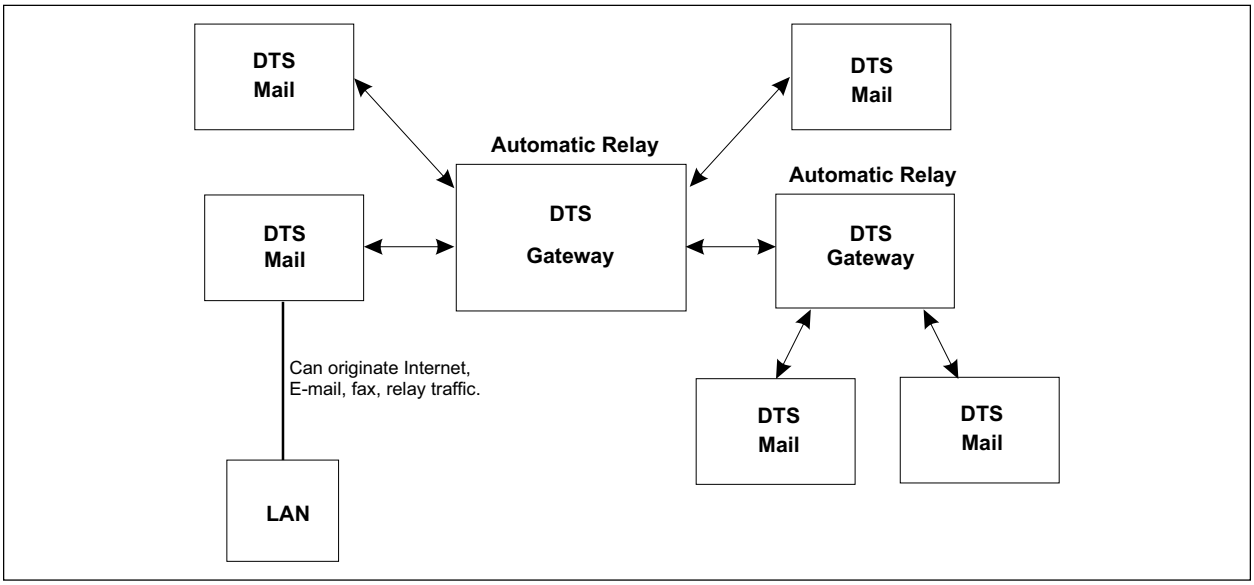

Network using DTS Mail Stations

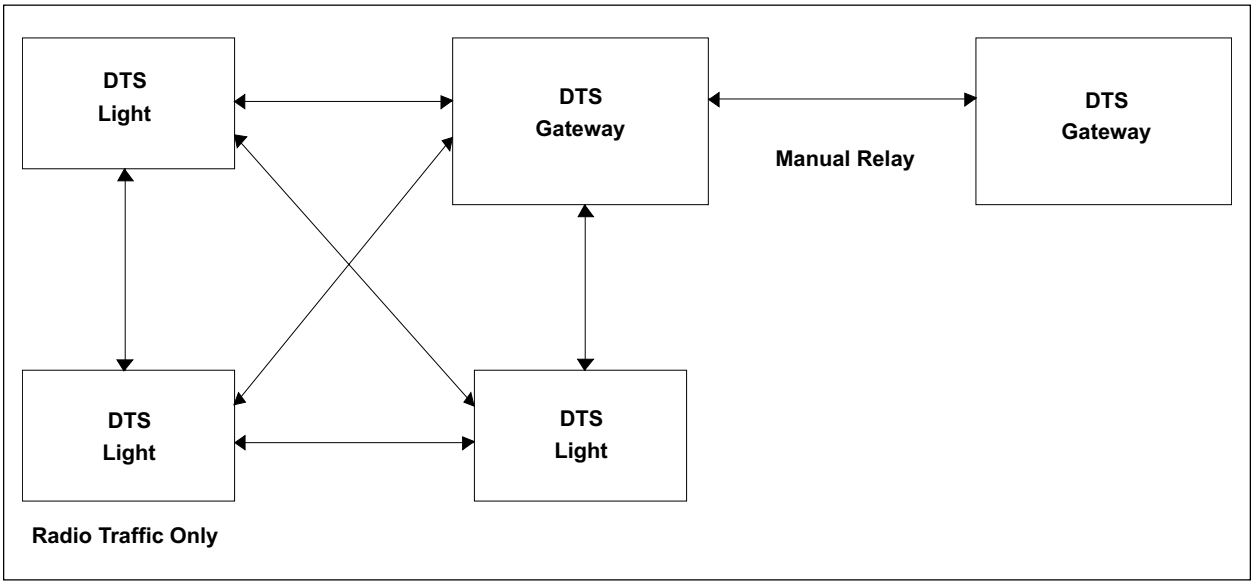

Network using DTS Light Stations

DATA COMMUNICATION SYSTEM CONFIGURATIONS

The following pages contain typical systems using Datron transceivers, modems, and software configured for the transmission of data. Radios used in the system configurations include Datron's 7000-series transceivers. The diagrams provide detailed cable and connectivity information.

In addition to the systems shown in this section, Datron can offer custom equipment configurations for almost any data application. For detailed information on custom requirements, contact your Datron Representative.

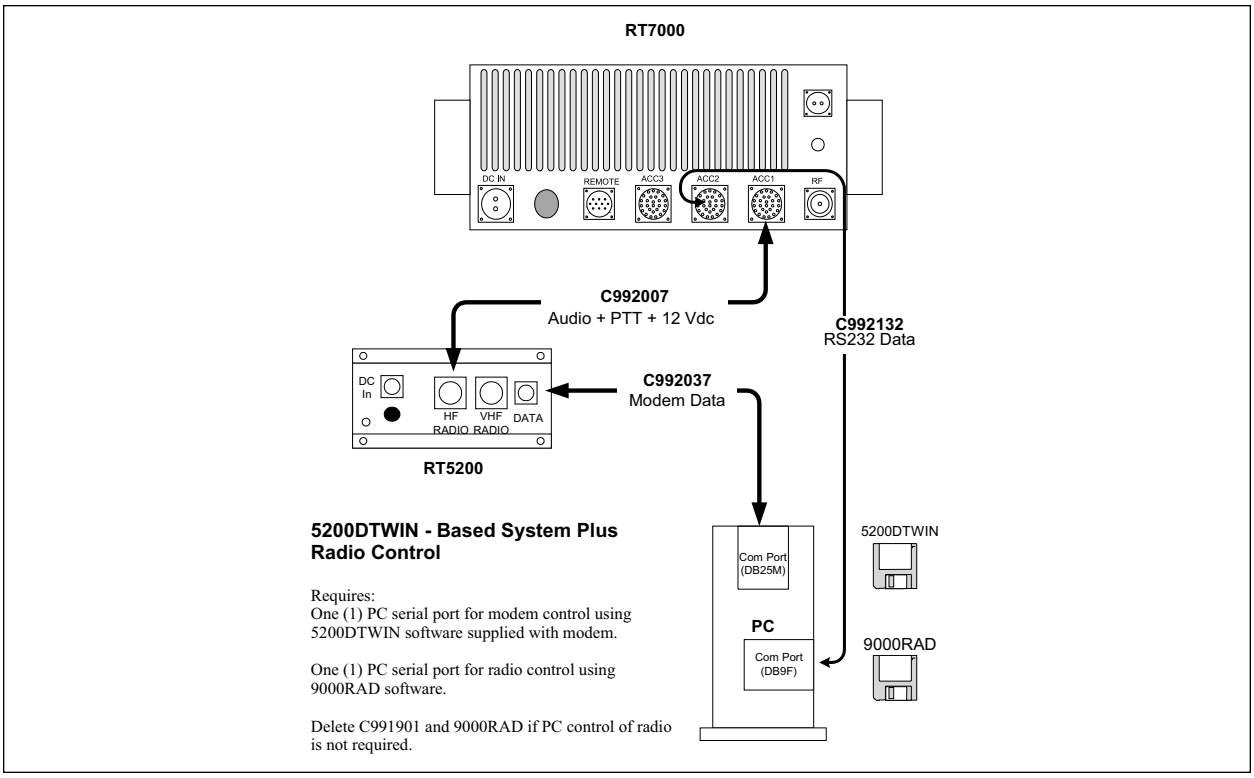

RT5200 to RT7000 ACC1 - 5200DTWIN Control of Modem 9000RAD Control of Radio on ACC2

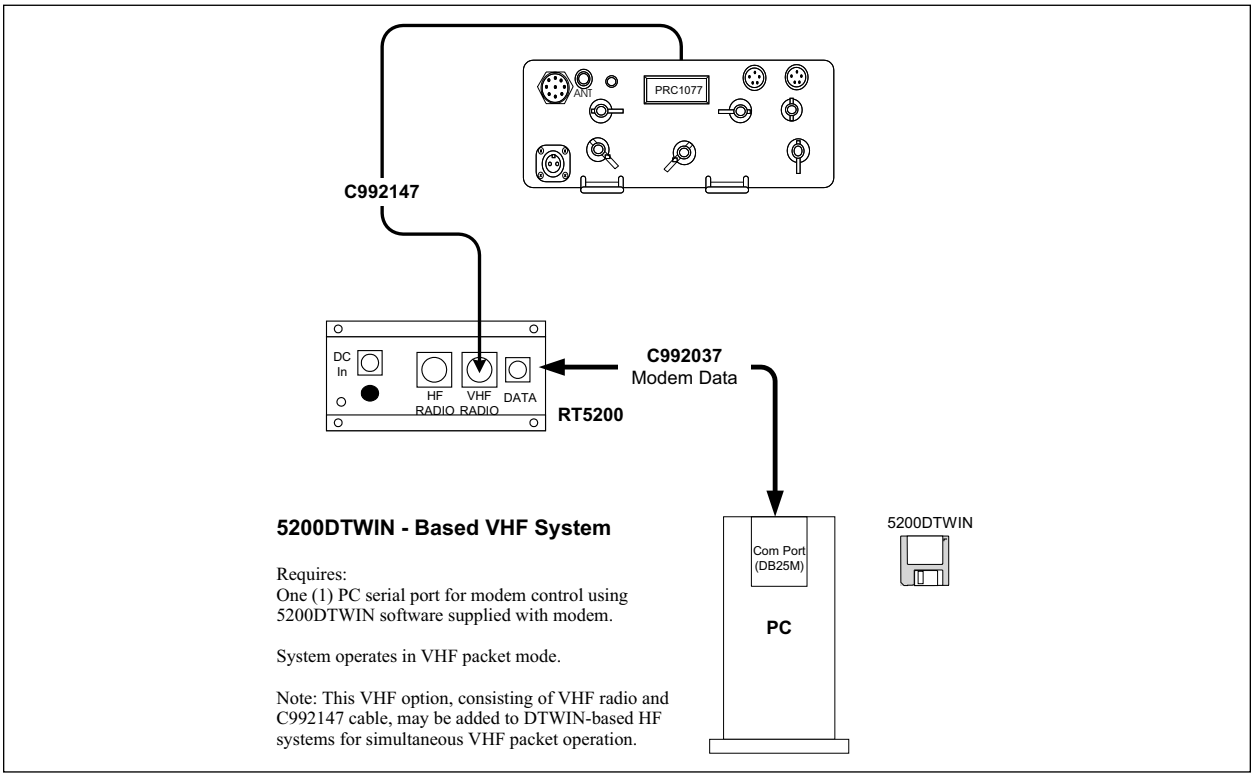

RT5200 to PRC1077 Mic Connector - 5200DTWIN Control of Modem Operating in VHF Packet Mode

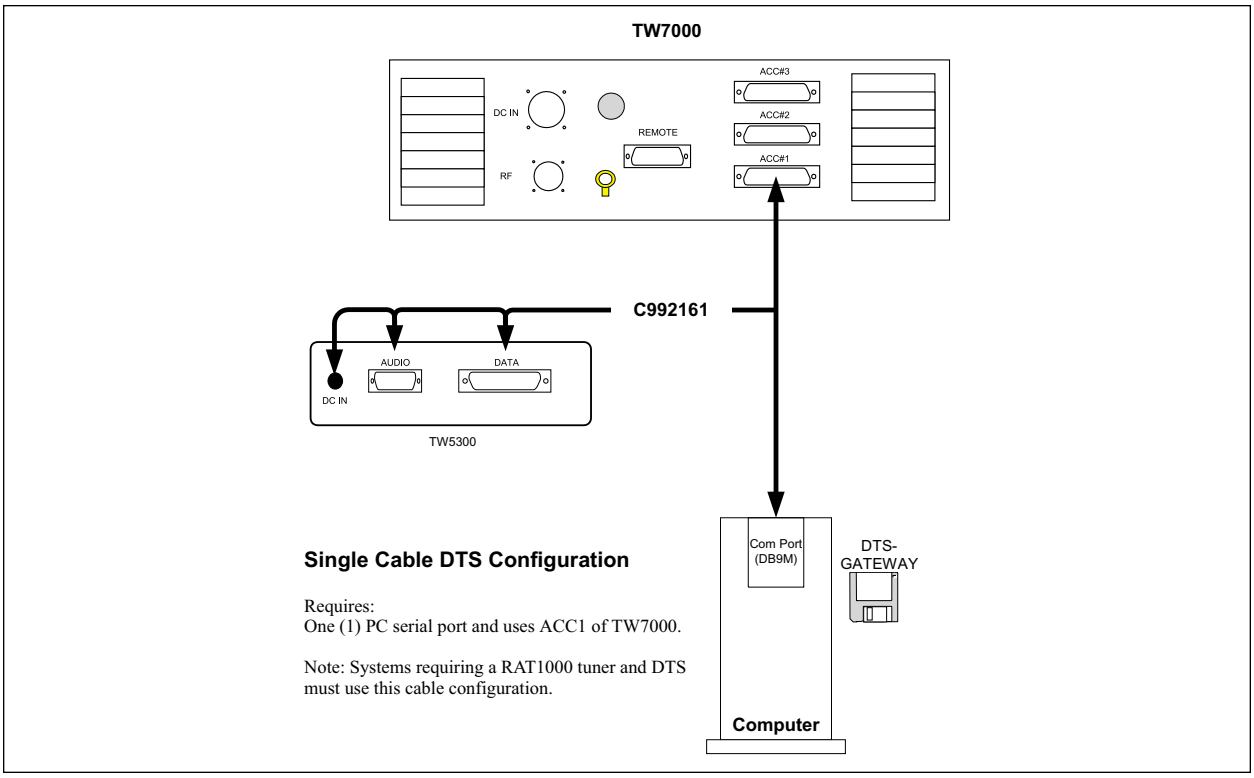

TW5300 to TW7000 ACC1 - DTS Control of Modem and Radio

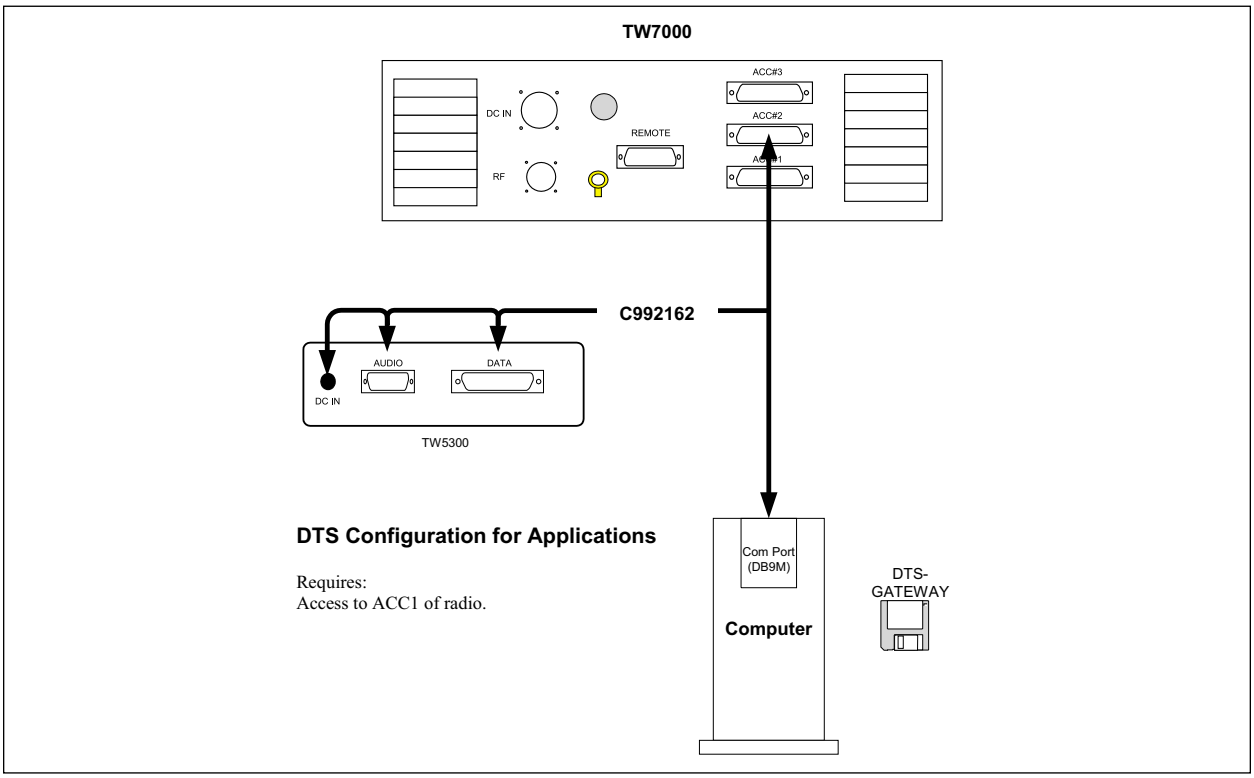

TW5300 to TW7000 ACC1 - DTS Control of Modem and Radio

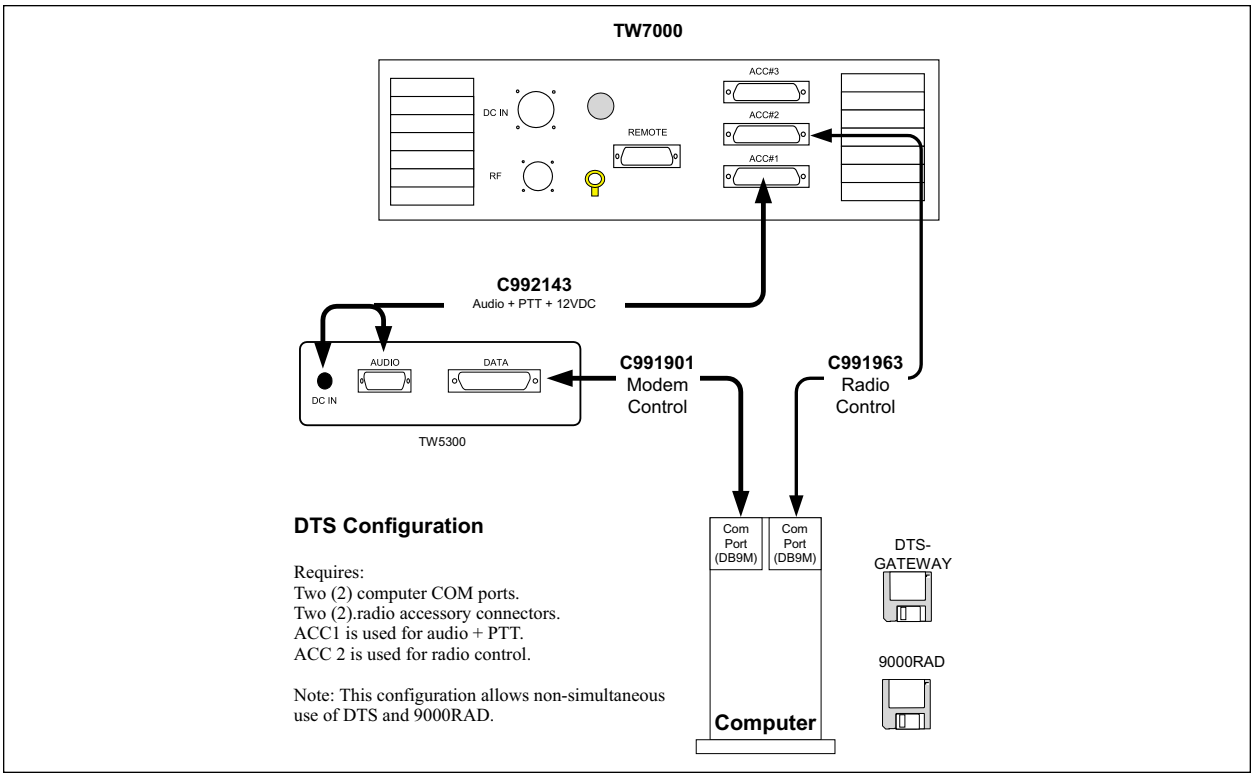

DTS Configuration

Requires:
Two (2) computer COM ports.
Two (2).radio accessory connectors.
ACC1 is used for audio + PTT.
ACC 2 is used for radio control.

Note: This configuration allows non-simultaneous use of DTS and 9000RAD.

TW5300 to TW7000 Dual COM Port DTS or 9000RAD Configuration

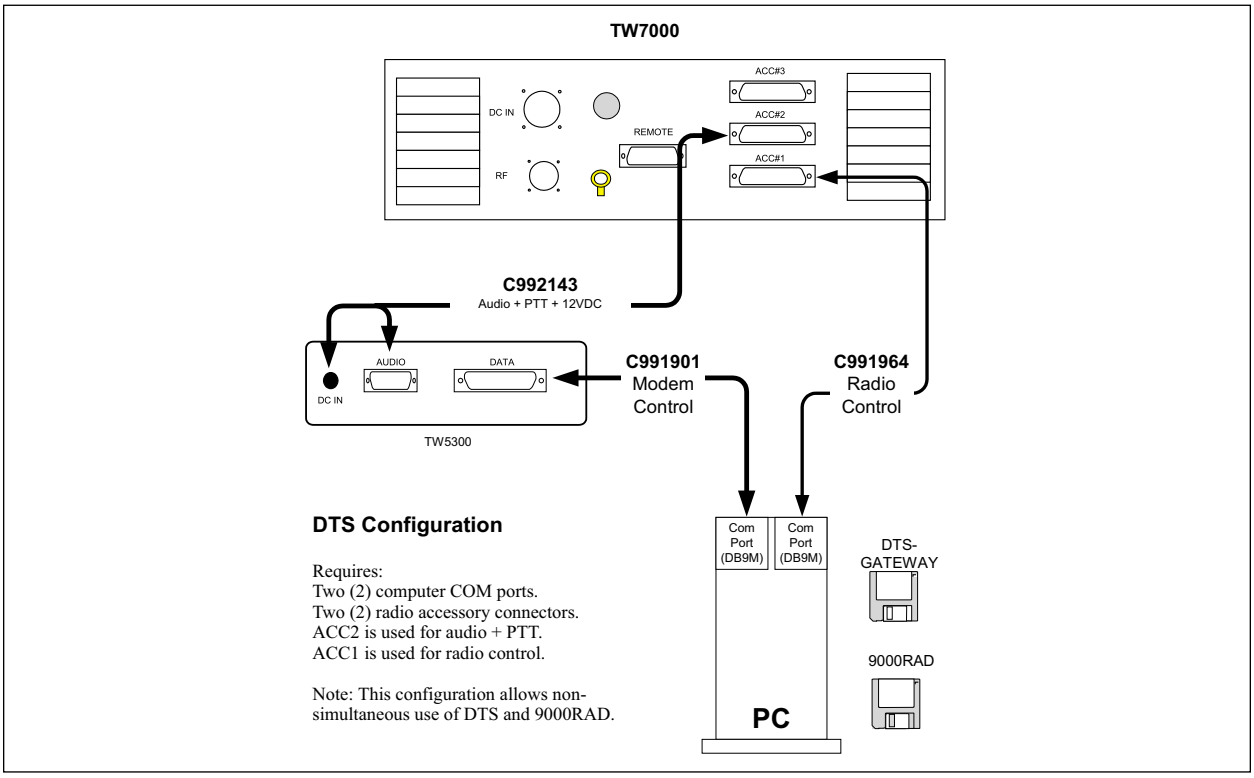

DTS Configuration

Requires:
Two (2) computer COM ports.
Two (2) radio accessory connectors.
ACC2 is used for audio + PTT.
ACC1 is used for radio control.

Note: This configuration allows non-simultaneous use of DTS and 9000RAD.

TW5300 to TW7000 Dual COM Port DTS or 9000RAD Configuration

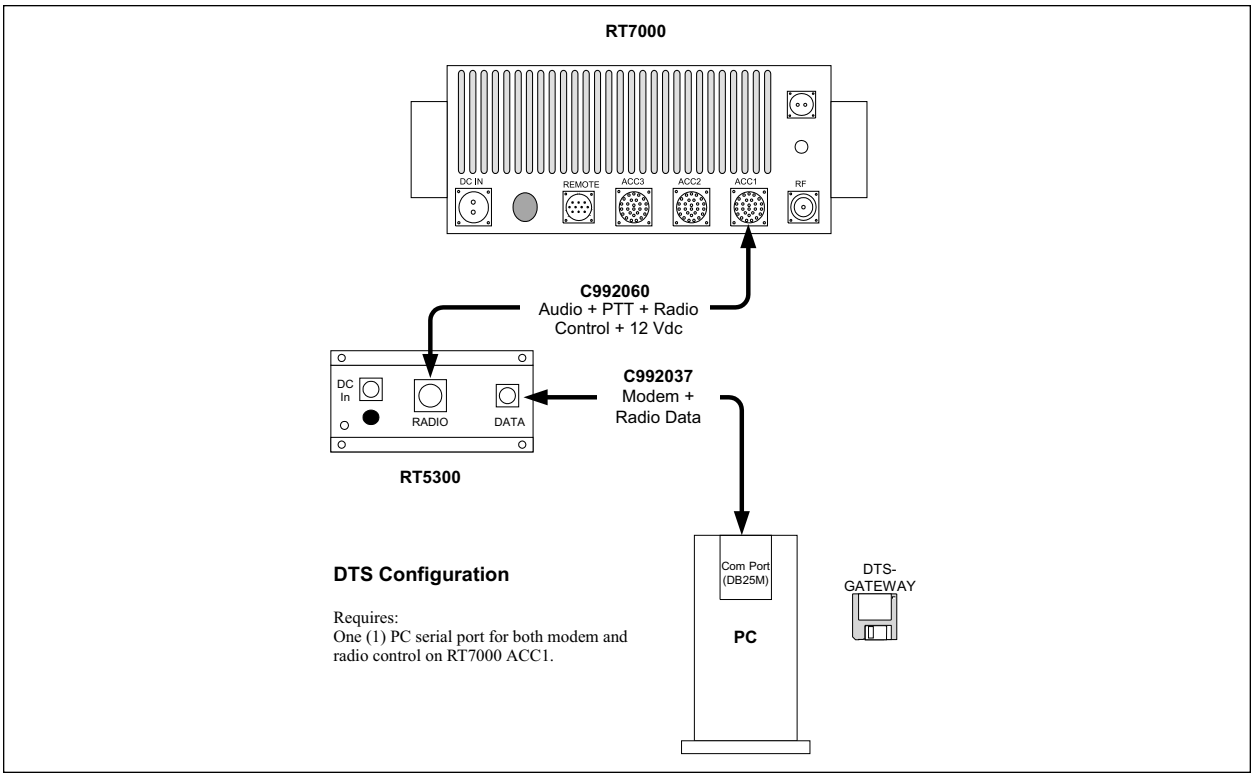

RT5300 to RT7000 ACC1 - DTS Control of Modem and Radio

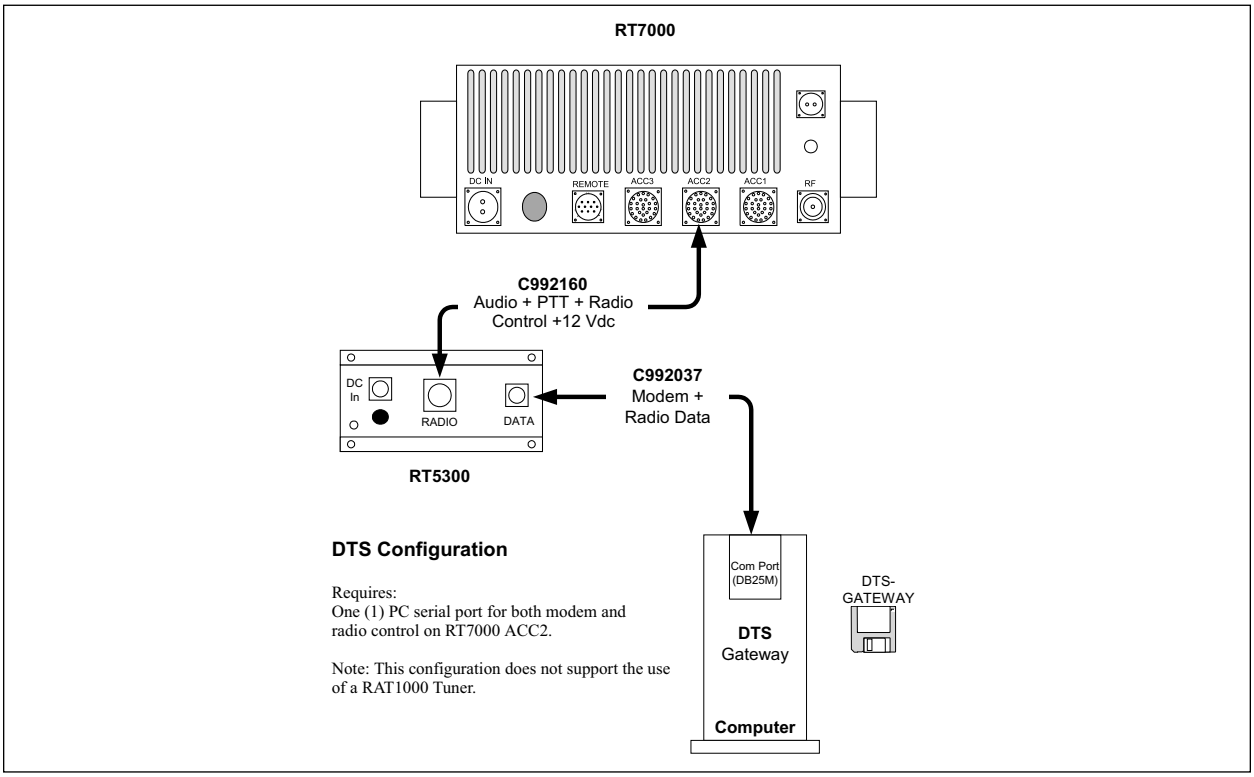

RT5300 to RT7000 ACC2 DTS Control of Modem and Radio

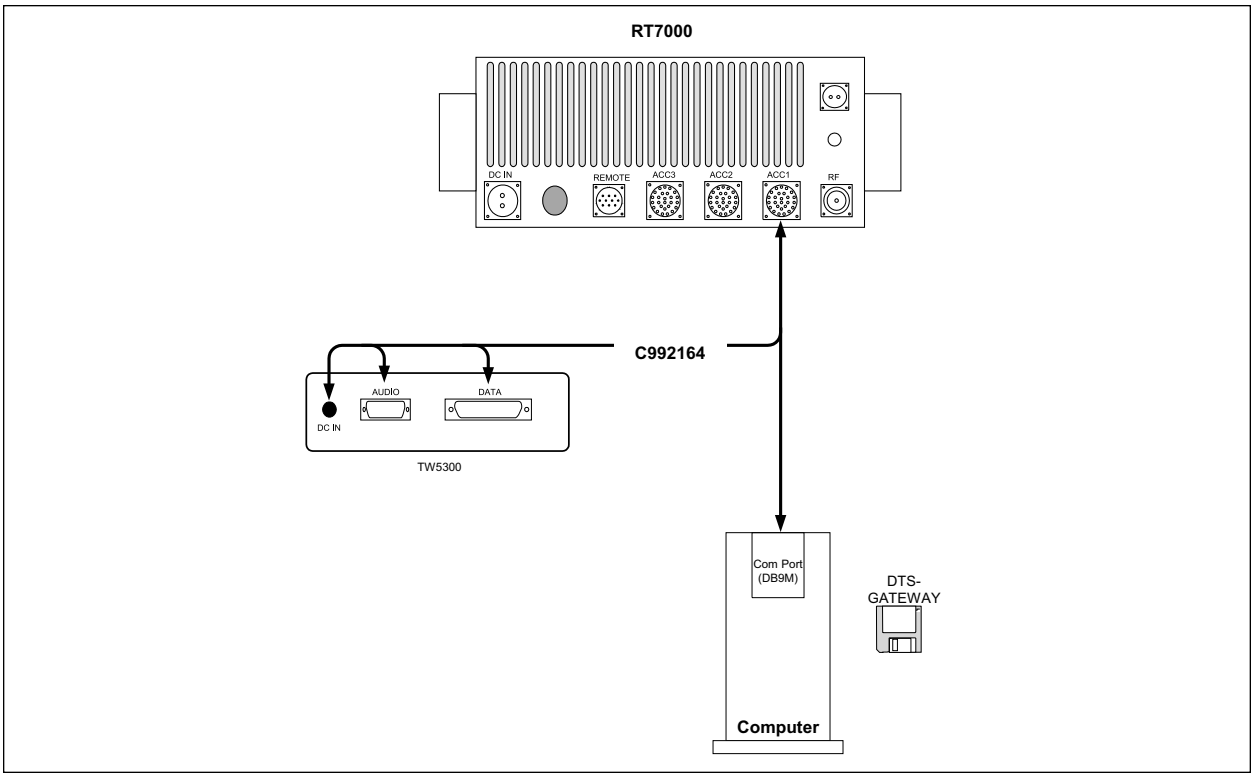

TW5300 to RT7000 ACC1 - DTS Control of Modem and Radio

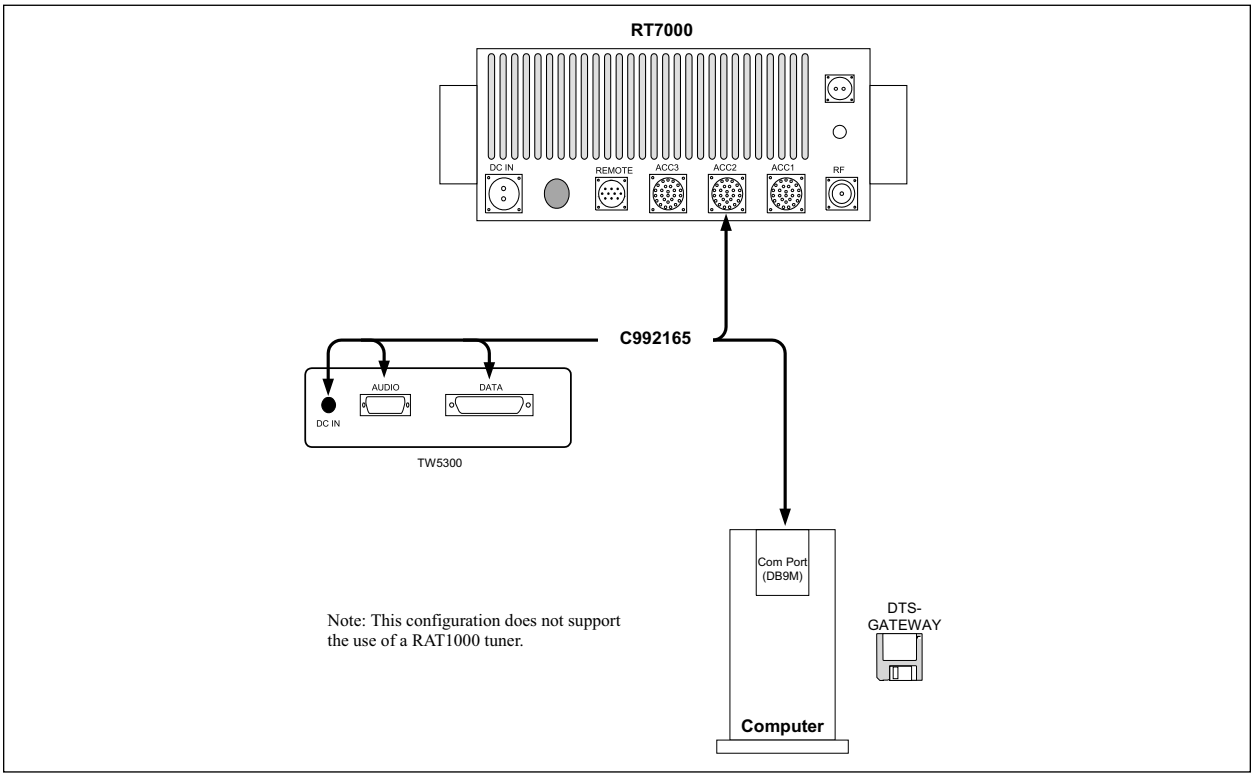

TW5300 to RT7000 ACC2 - DTS Control of Modem and Radio

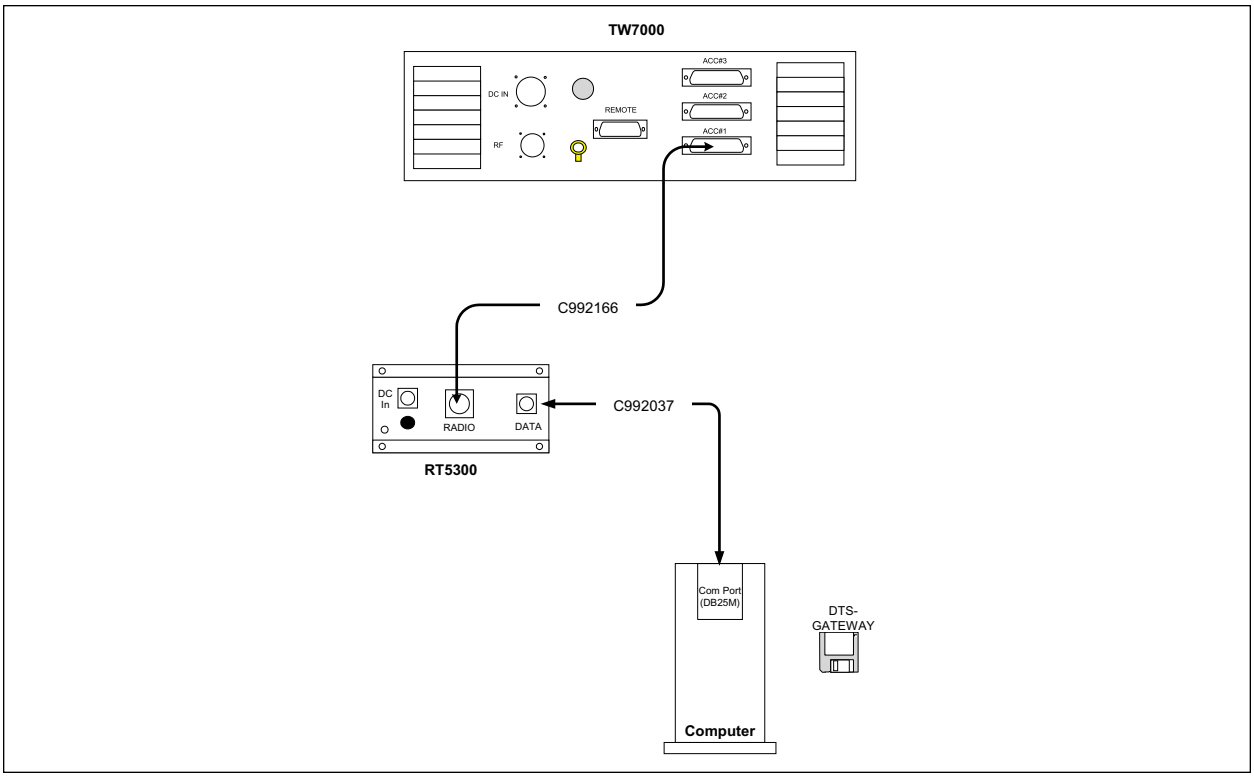

RT5300 to TW7000 ACC1 DTS Configuration Modem and Radio Control

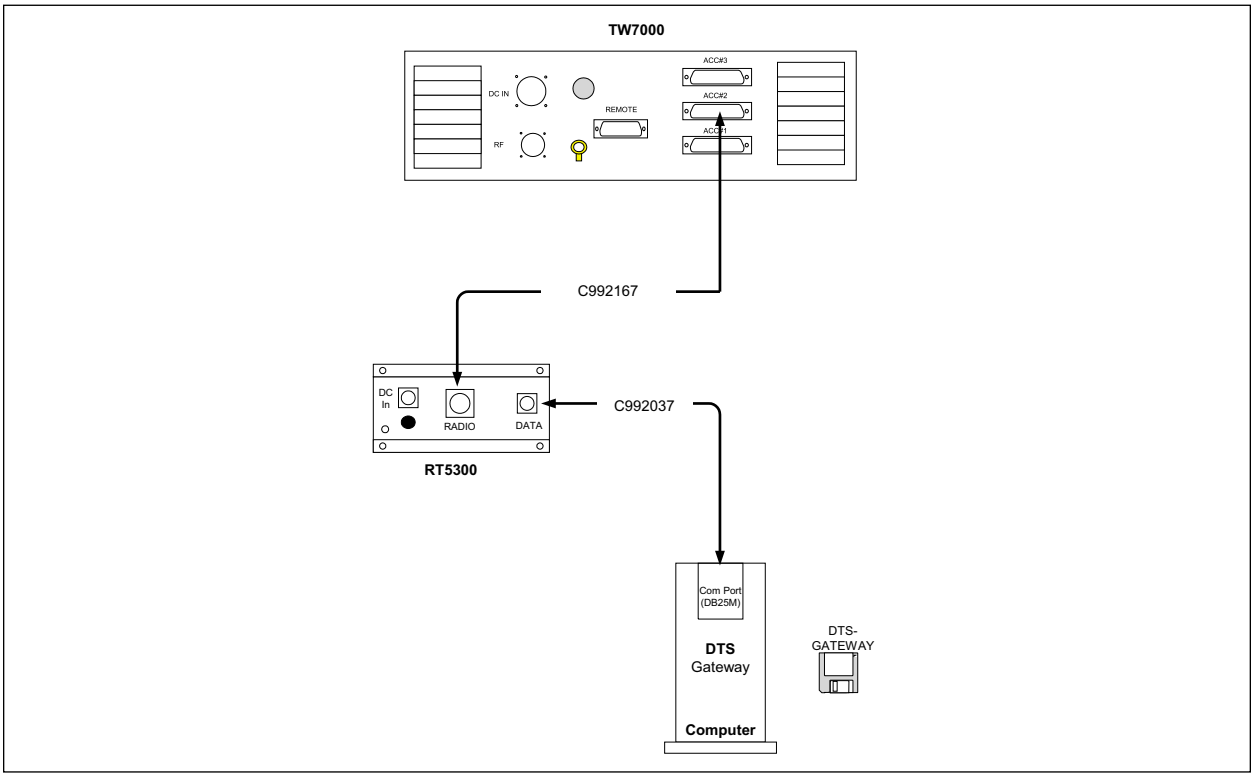

RT5300 to TW7000 ACC2 DTS Control of Modem and Radio

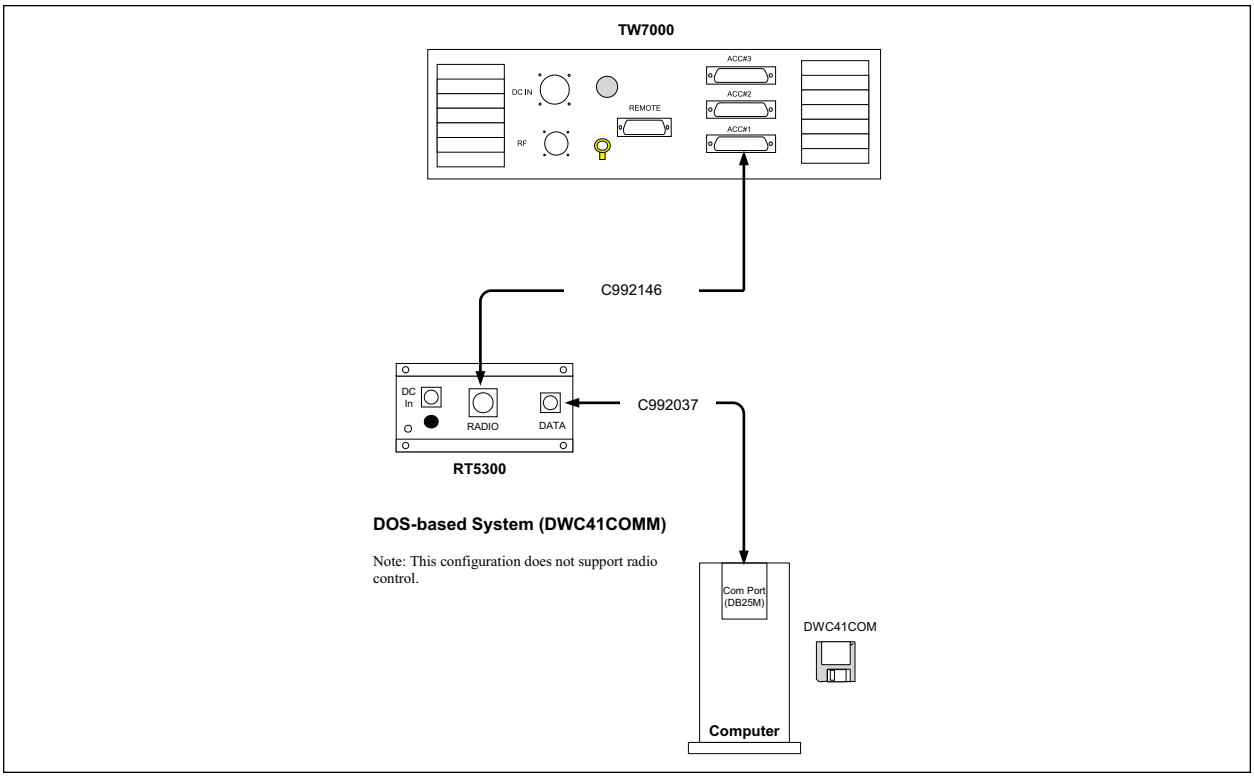

RT5300 to TW7000 ACC1 DWC41COM Control of Modem

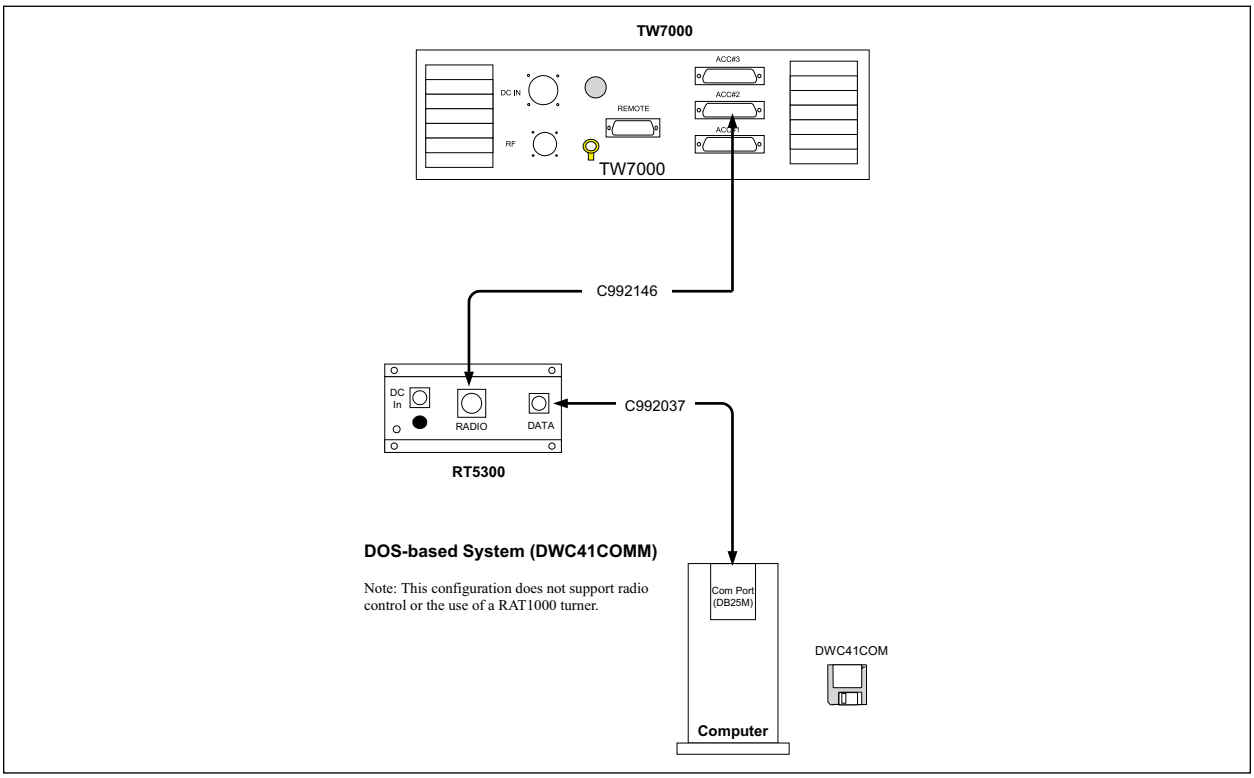

RT5300 to TW7000 ACC2 - DWC41COM Control of Modem

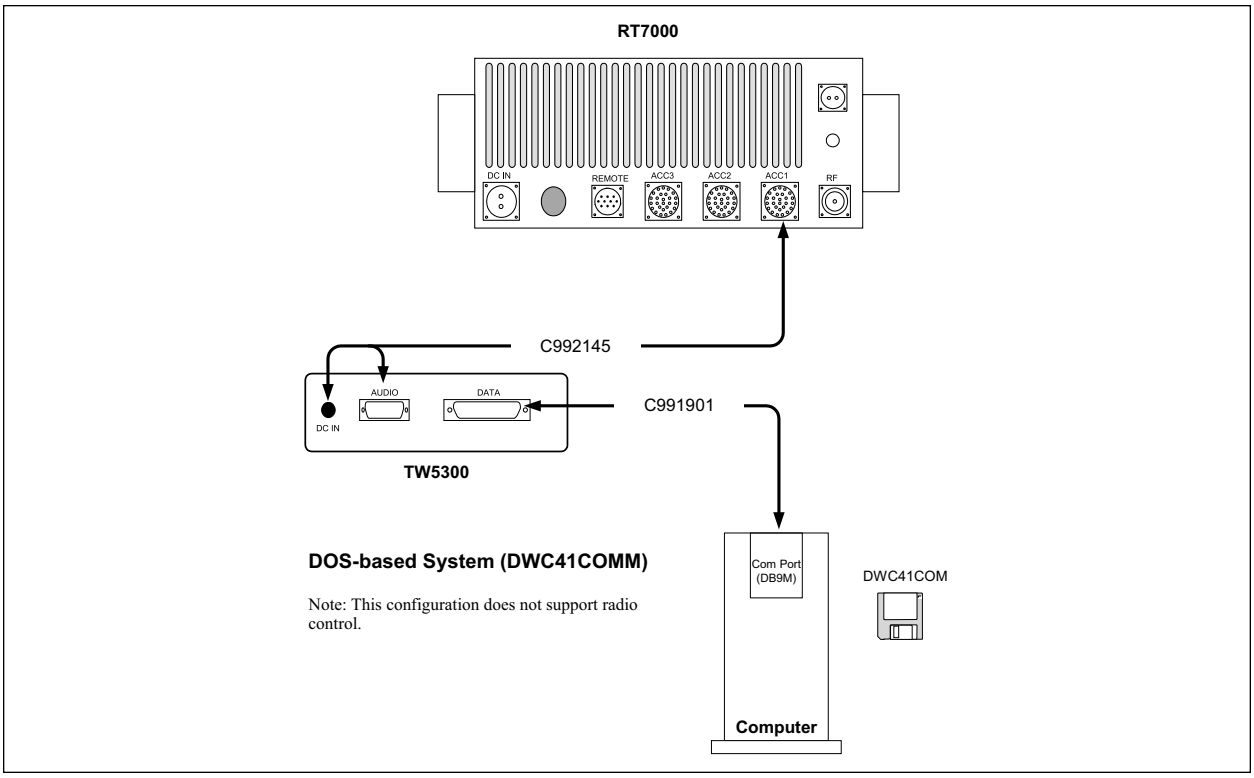

TW5300 to RT7000 ACC1 - DWC41COM Control of Modem

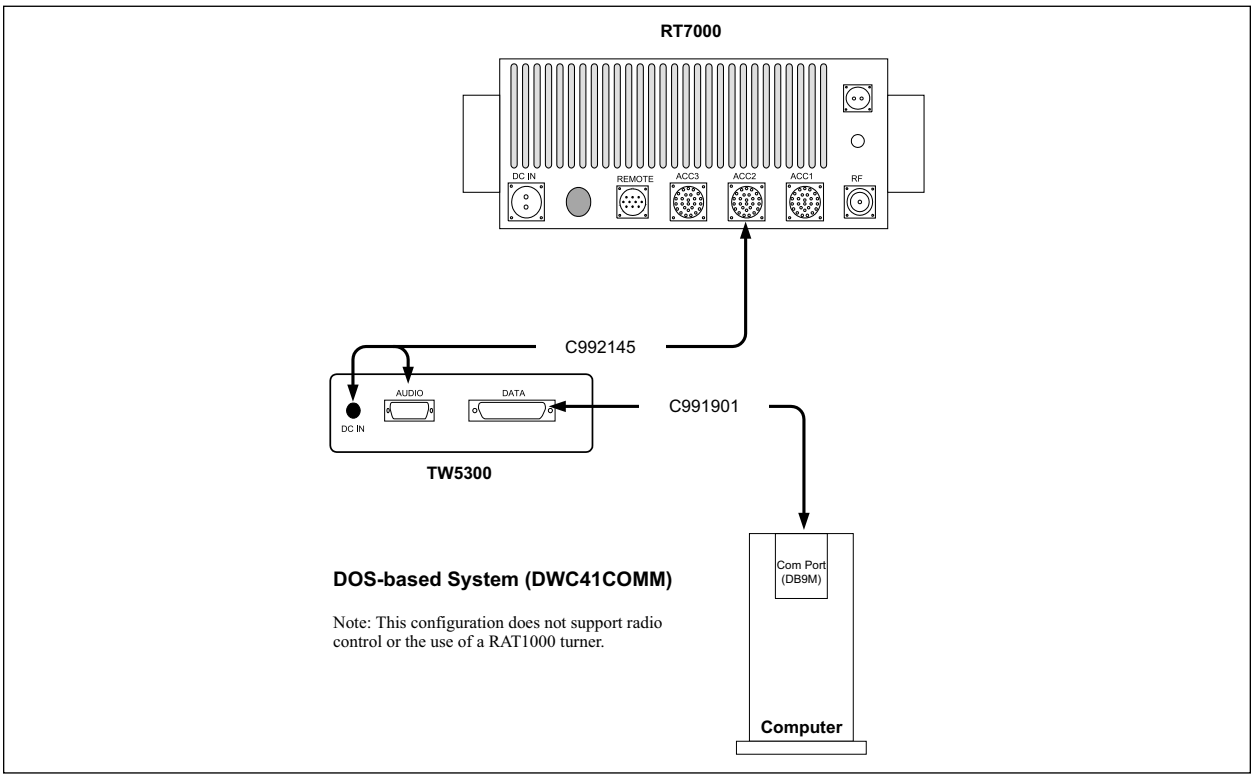

TW5300 to RT7000 ACC2 - DWC41COM Control of Modem

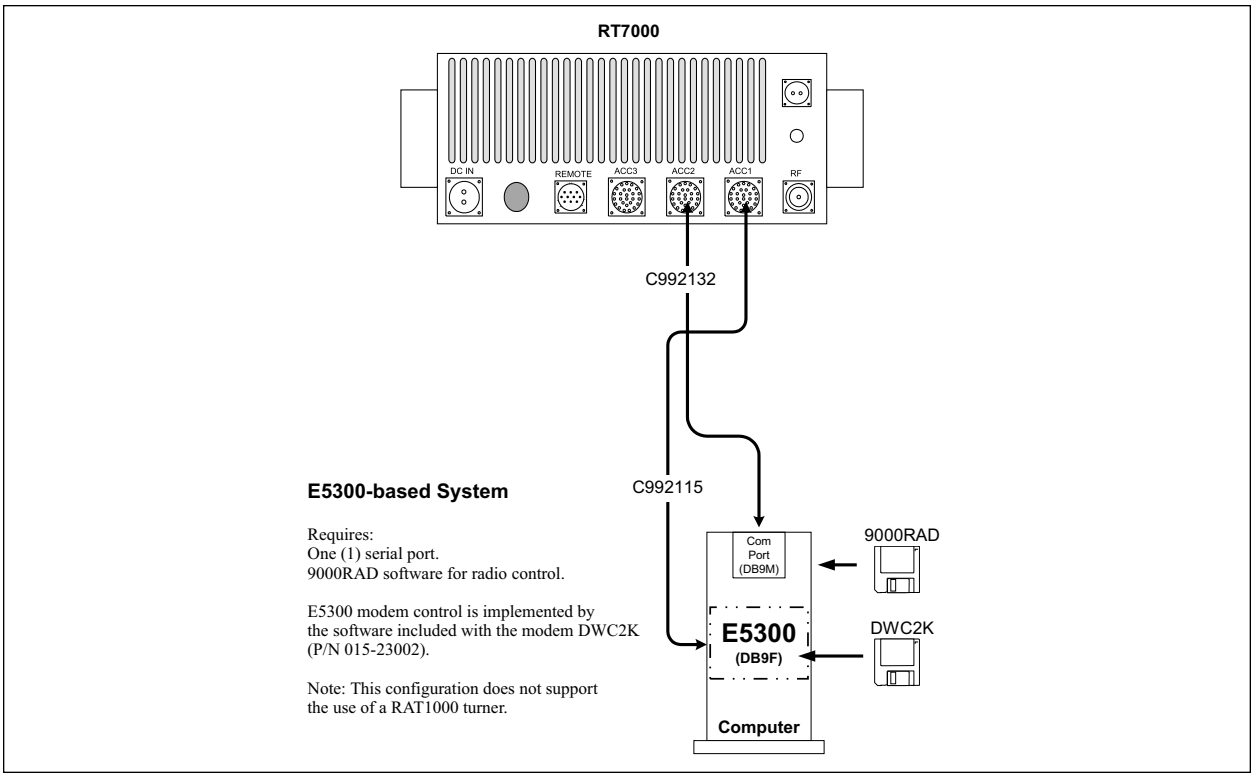

E5300 to RT7000 ACC1 - DWC2K Control of Modem 9000RAD Control of Radio on ACC2

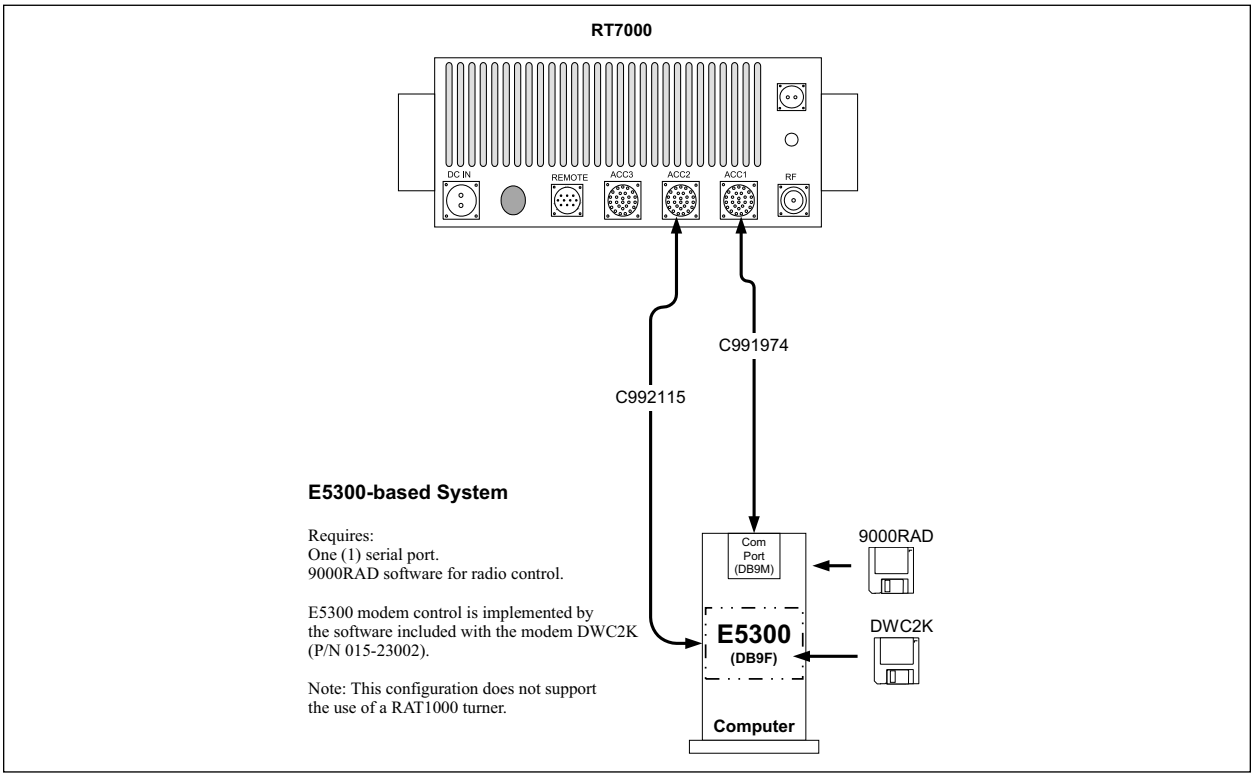

E5300 to RT7000 ACC2 - DWC2K Control of Modem 9000RAD Control of Radio on ACC1

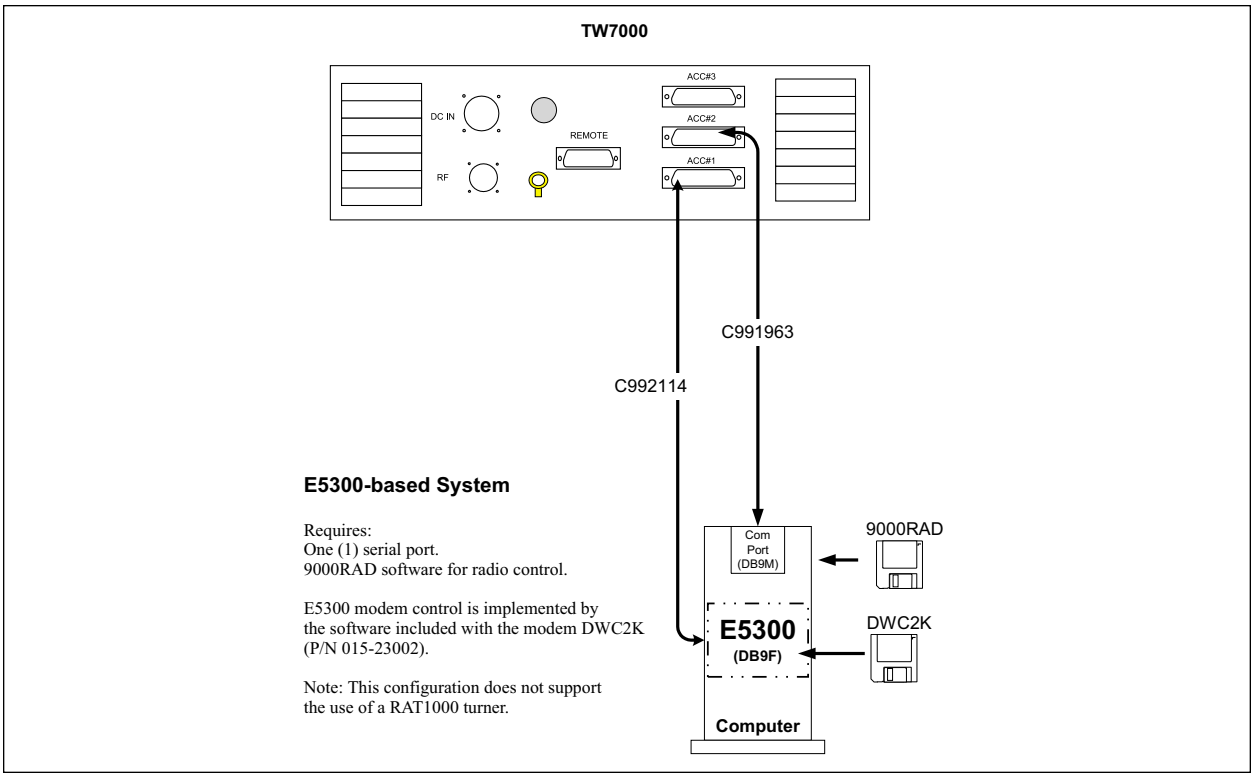

E5300 to TW7000 ACC1 - DWC2K Control of Modem 9000RAD Control of Radio on ACC2

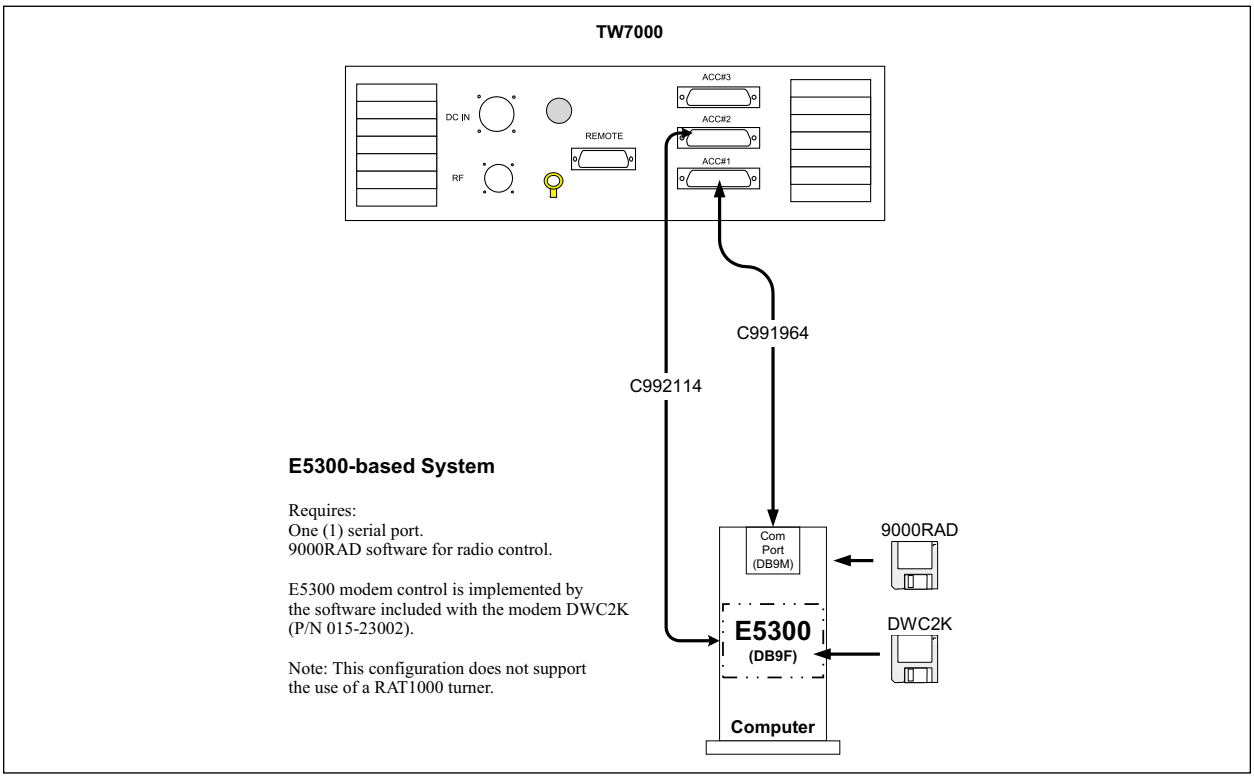

E5300 to TW7000 ACC2 - DWC2K Control of Modem 9000RAD Control of Radio on ACC1

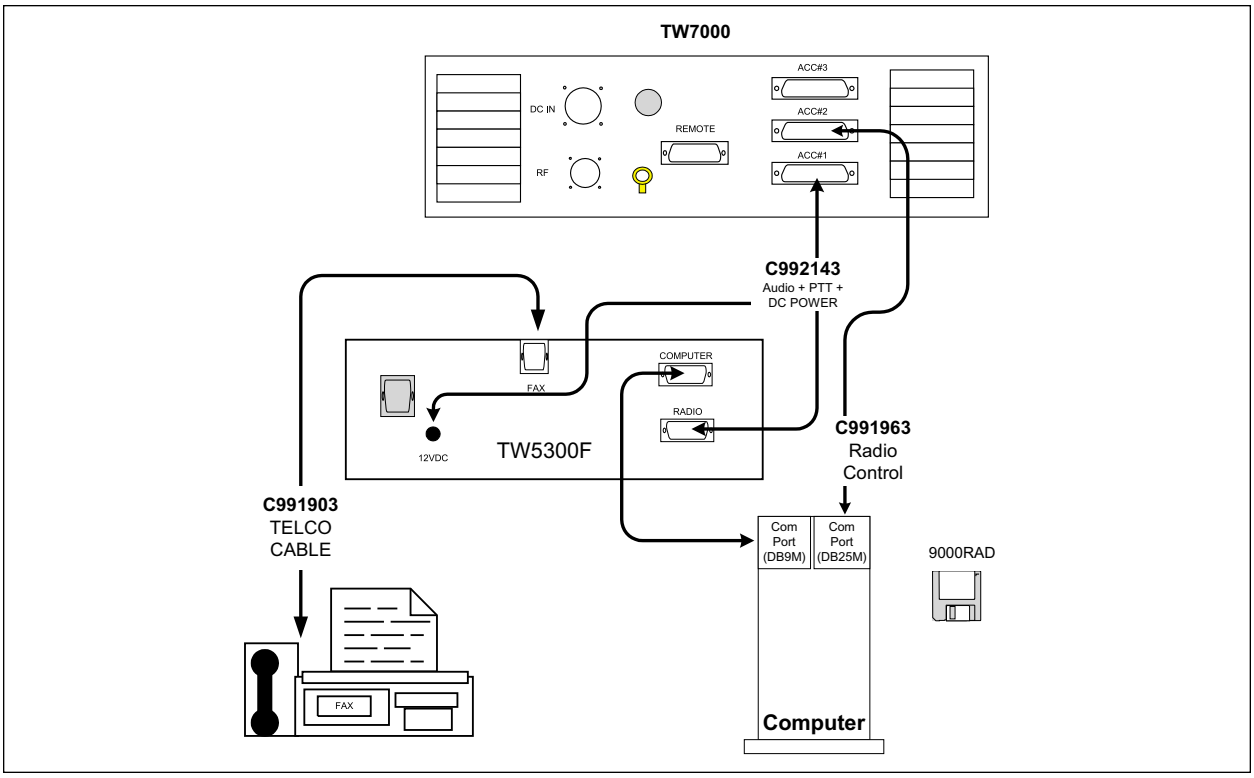

TW5300F Fax-Modem to TW7000 ACC2 and 9000RAD for Radio Control on ACC1

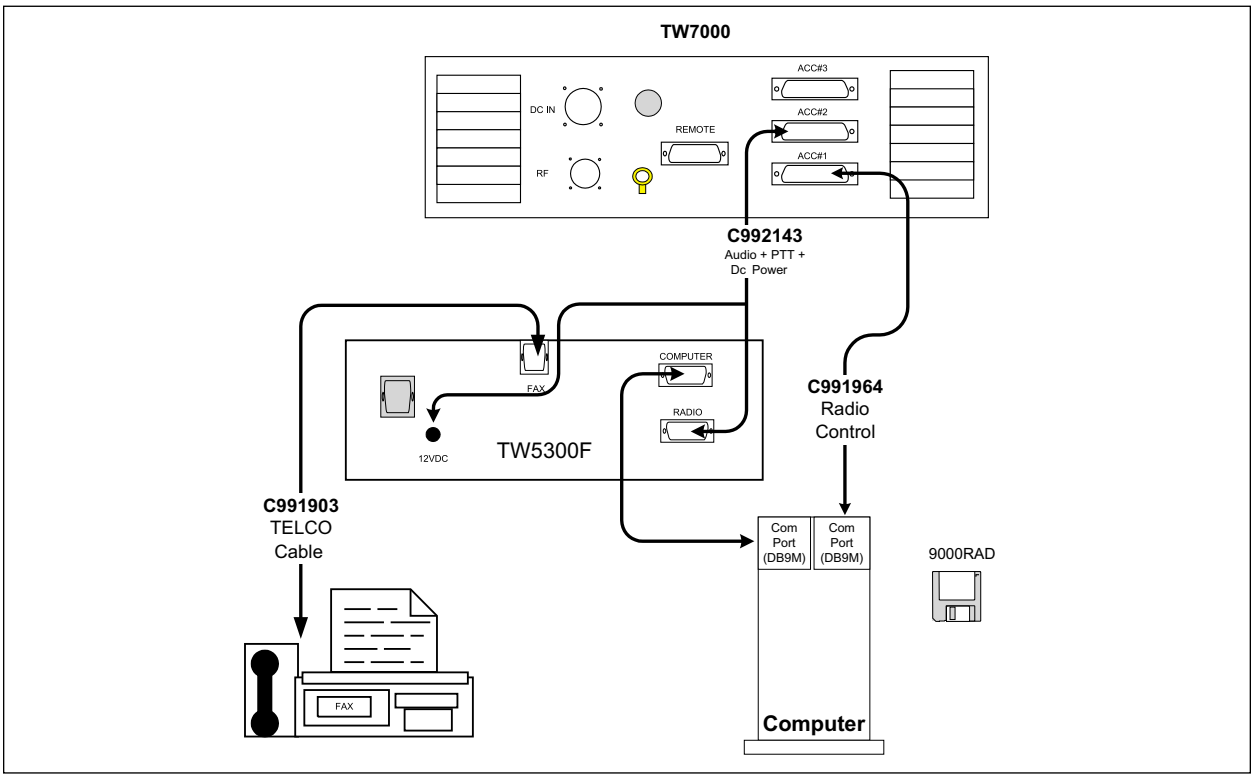

TW5300F Fax-Modem to TW7000 ACC1 and 9000RAD for Radio Control on ACC2

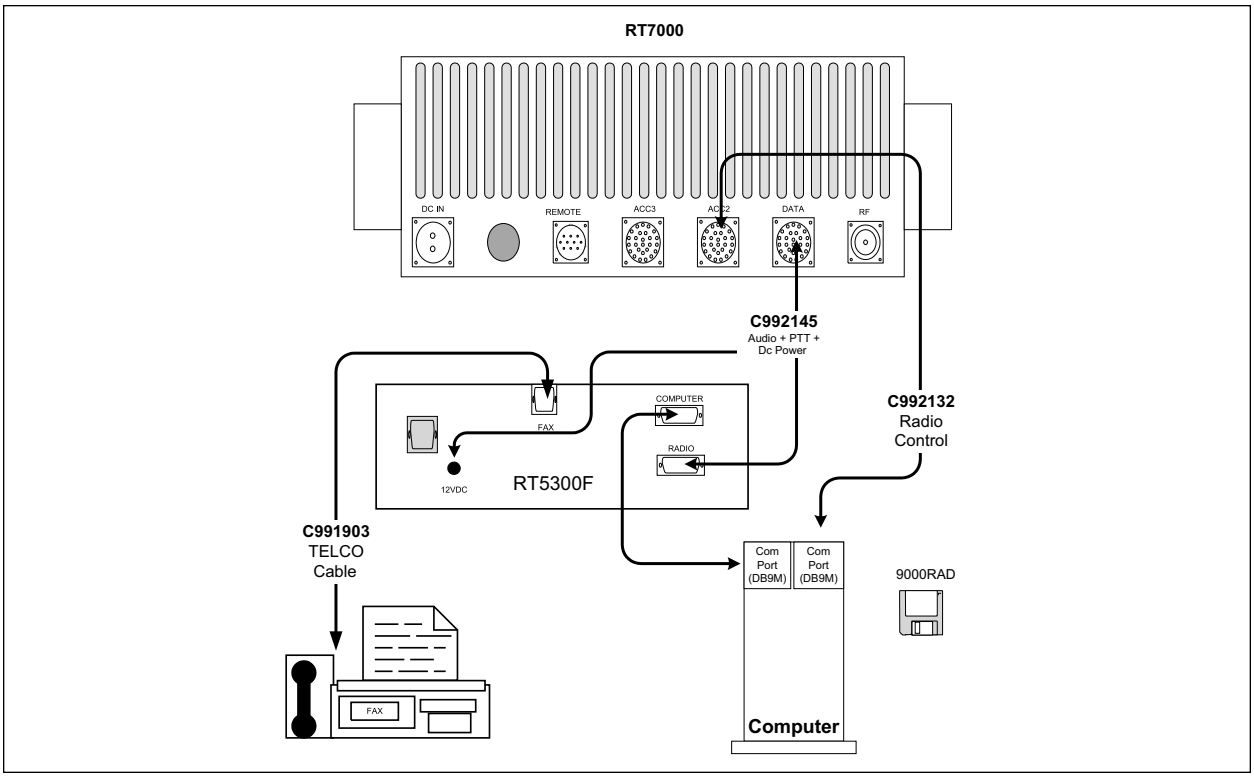

RT5300F Fax-Modem to RT7000 ACC1 and 9000RAD for Radio Control on ACC2

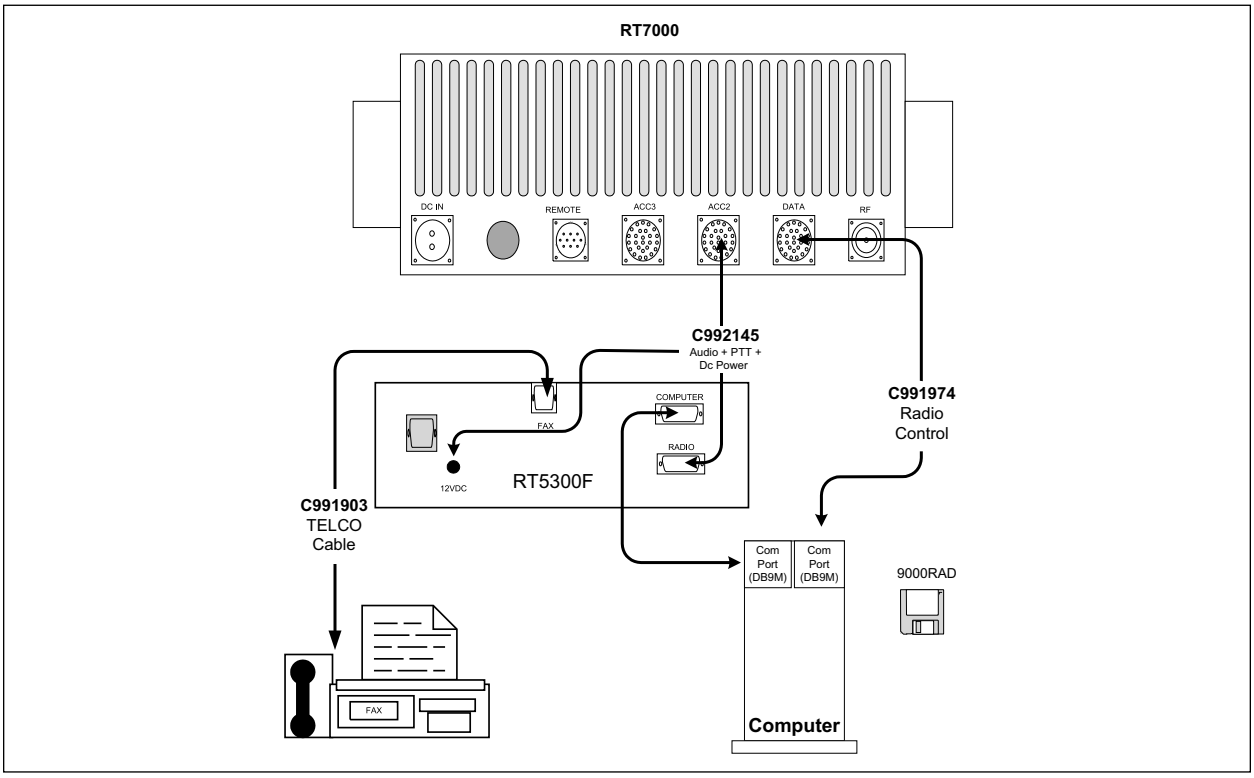

RT5300F Fax-Modem to RT7000 ACC2 and 9000RAD for Radio Control on ACC1

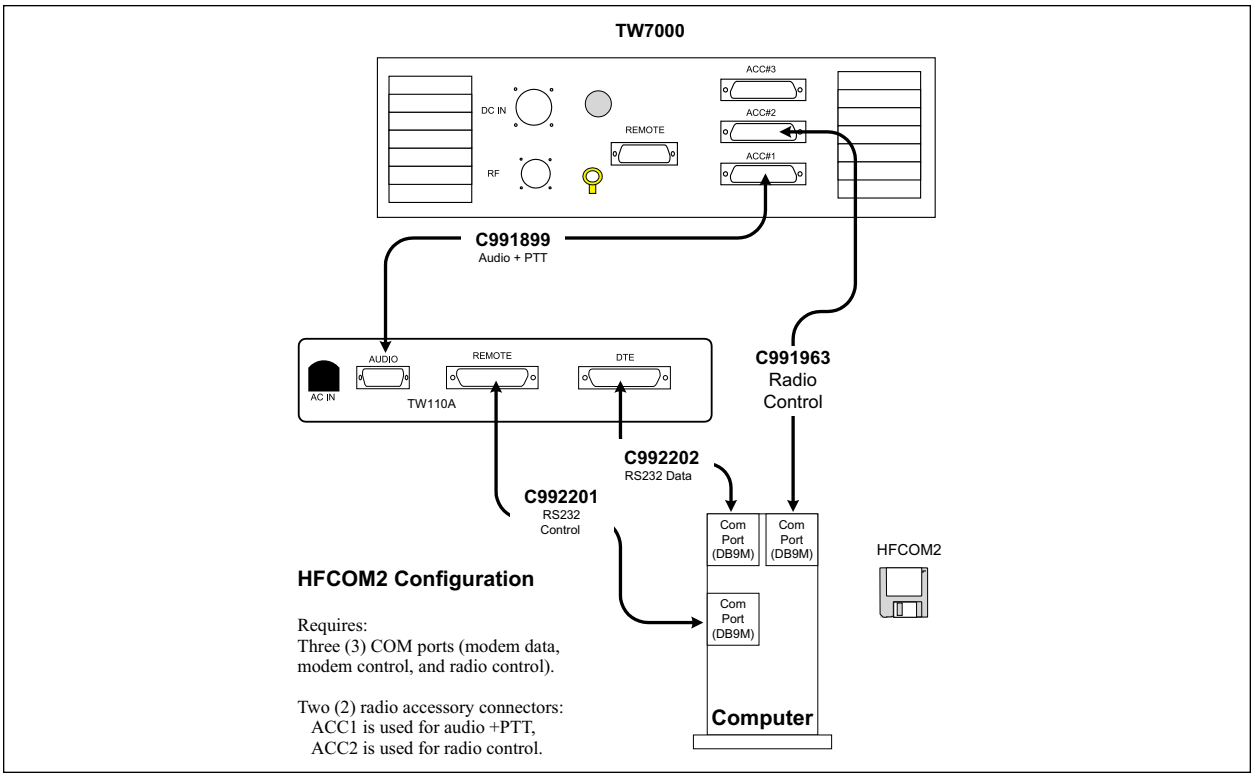

TW110A Modem to TW7000 ACC1 and ACC2 - HFCOM2 Configuration

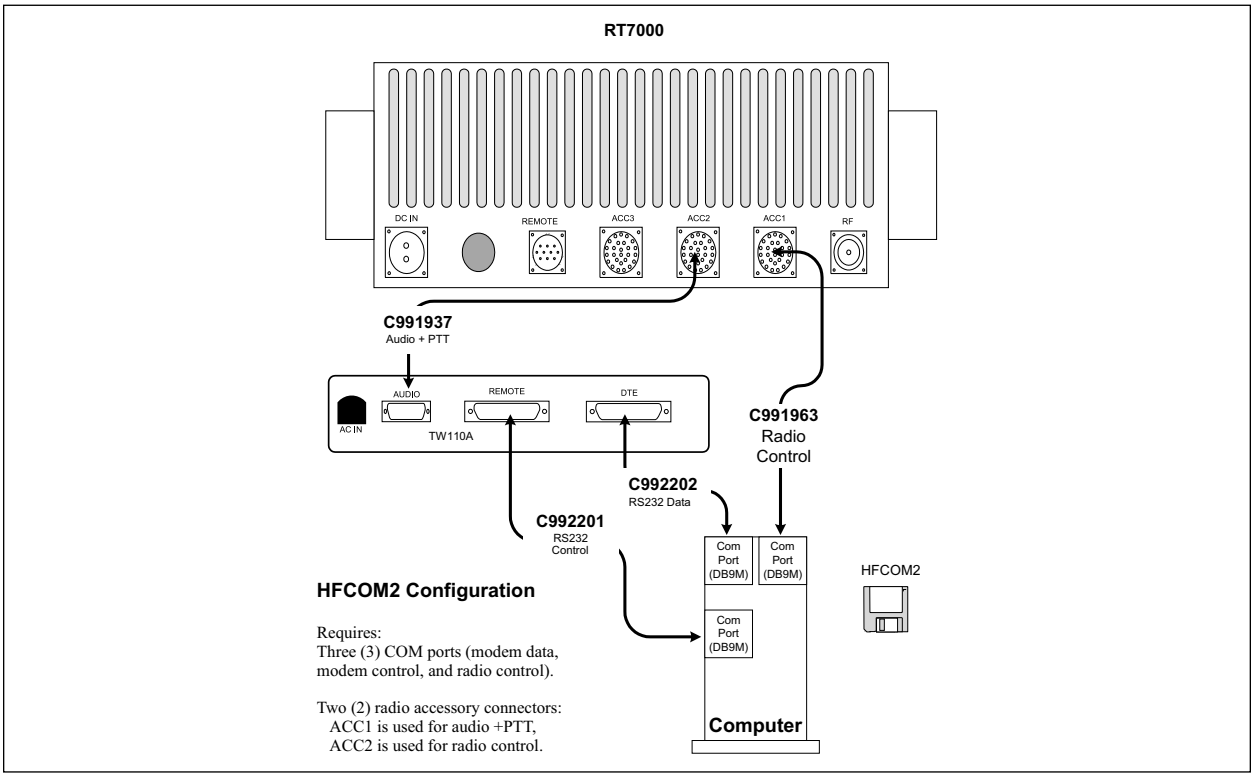

TW110A Modem to RT7000 ACC1 and 2 - HFCOM2 Configuration

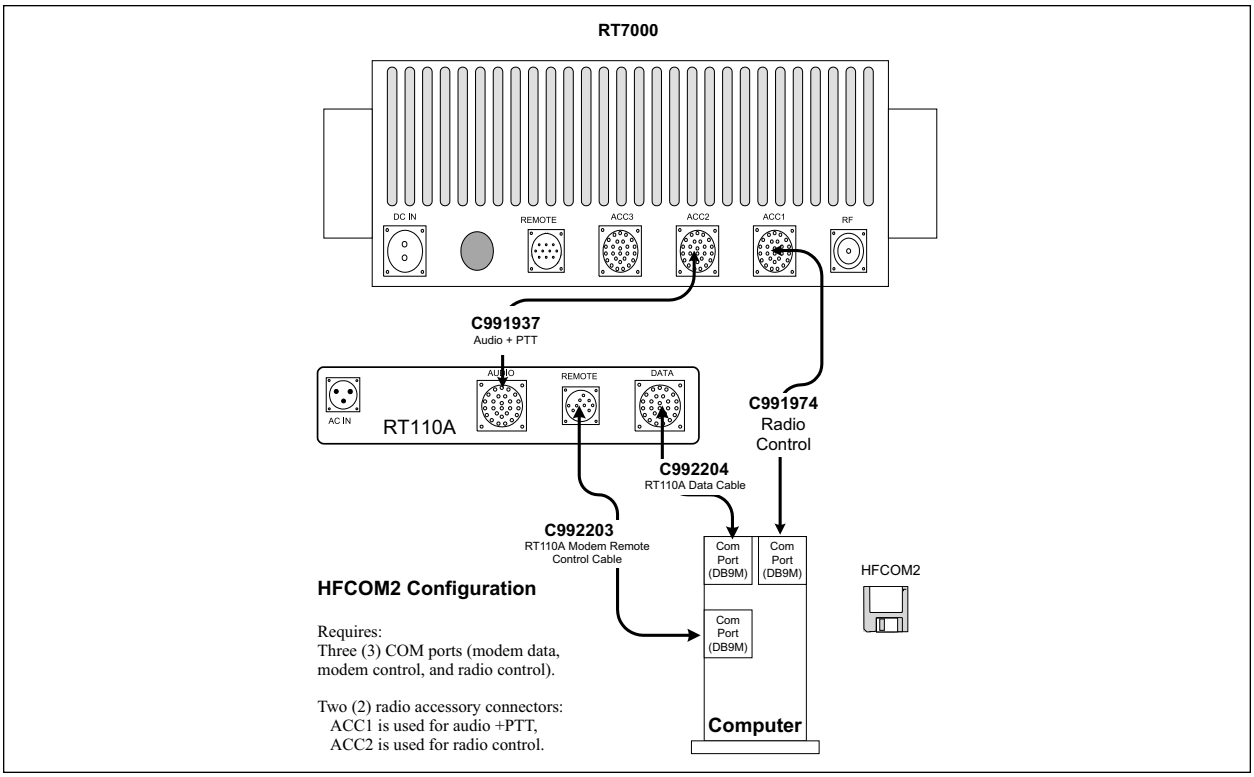

RT110A Modem to RT7000 ACC1 and ACC2 - HFCOM2 Configuration

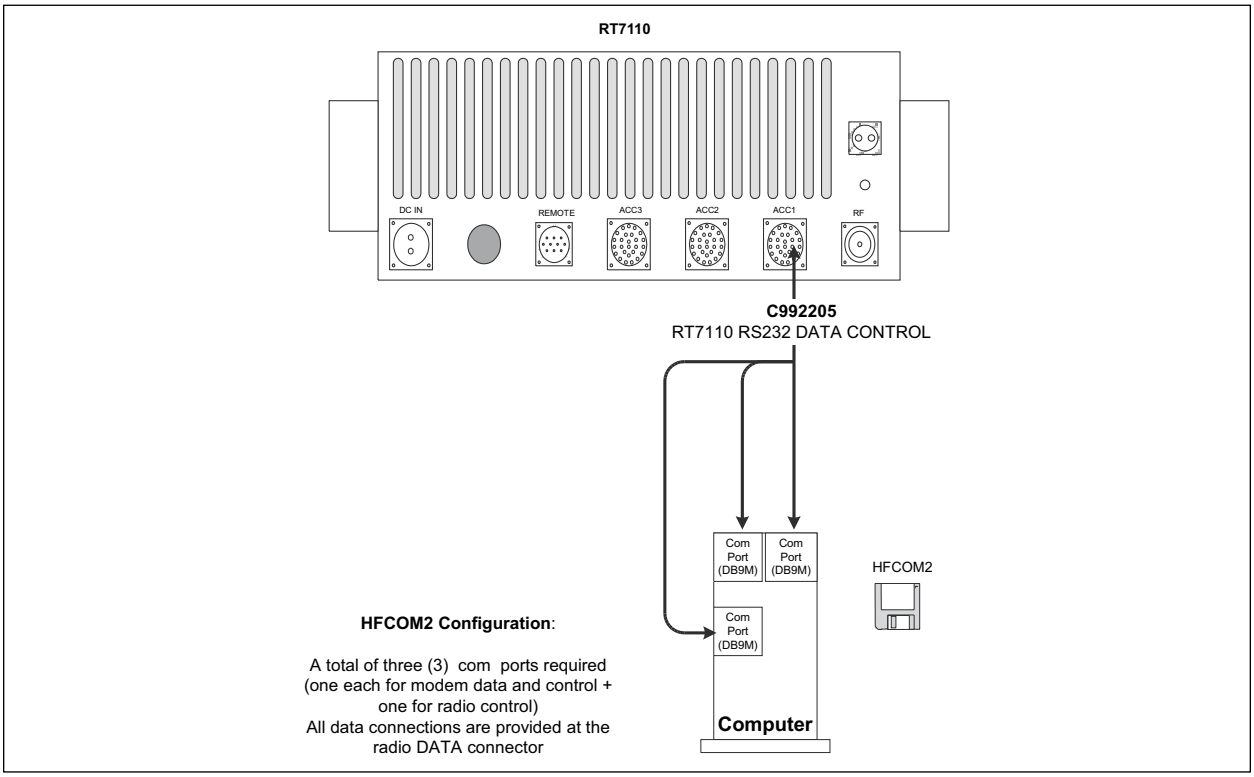

RT7110 Transceiver - HFCOM2 Configuration

DATA COMMUNICATION CABLES, SPARES AND MANUALS

Cables for Data Communication

All cables come complete with connectors unless indicated otherwise.

DWC P/N	Description
C991899	TW110A to TW7000 (ACC1), audio, 1.2m.
C991901	TW5300 to PC, control, 2.4m.
C991903	Telephone line to TW5300F, 2.4m.
C991937	TW110A to RT7000 (ACC2), audio, .9m.
C991963	TW7000 (ACC2) to PC, data, 2m.
C991964	TW7000 (ACC1) to PC, data, 2m.
C991974	RT7000 (ACC1) to PC data, 1.8m.
C992007	RT5200 to RT7000 (ACC1), audio, 2.1m.
C992037	RT-modem to PC, data, 1.8m.
C992060	RT5300 to RT7000 (ACC1), audio, 1.8m.
C992114	TW7000 (ACC1) to PC, audio, 1.8m.
C992115	RT7000 (ACC1) to PC, audio, 1.8m.
C992132	RT7000 (ACC2) to PC, RS232 data, 1.8m.
C992143	TW5300 to TW7000 (ACC1), audio, 1.7m.
C992145	TW5300 to RT7000 (ACC1), audio, 1.5m.
C992146	RT5300 to TW7000 (ACC1), DOS-based software, 1. 8m.
C992147	RT5200 to PRC1088, data, 1.8m.
C992160	RT5300 to RT7000 (ACC2), audio, 1.8m.
C992161	TW5300 to TW7000 (ACC1) to PC, audio, PTT, power, 1.5m x 3.3m x 1.7m.
C992162	TW5300 to TW7000 (ACC2) to PC, audio/data 1.5m.
C992164	TW5300 to RT7000 (ACC1) to PC, audio, PTT, power, 1.5m x 3.3m x 1.7m.
C992165	TW5300 to RT7000 (ACC2) to PC, audio, PTT, power, 1.8m.
C992166	RT5300 to TW7000 (ACC1), audio, 1.8m.
C992167	RT5300 to TW7000 (ACC2), audio, 1.8m.
C992201	TW110A to PC, RS232 control, 1.8m.
C992202	TW110A to PC, RS232 data, 1.8m.
C992203	RT110A to PC, control, 1.5m.
C992204	RT110A to PC, data, 1.5m.
C992205	RT7110 to PC, data, 1.5m.

Note: Standard length of each cable is indicated in cable description. To order nonstandard cable lengths, contact your Datron Representative.

Spares Kits for Data Communication

DWC P/N	Description
RT5300PSK	Part Spares Kit.
TW5300PSK	Part Spares Kit.

Note: To order an individual spares kit, add the appropriate suffix (i.e., -MK, -MRK, -PSK) to the product part number. For a complete list of Module Kit, Module Repair Kit, and Parts Spares Kit, see the Spares section.

Manuals for Data Communications

DWC P/N	**Operator** (supplied with unit)	**Technical** (order separately)	**Operator/Technical** (supplied with unit)
5200DTWIN-MSOP	✓		
5200-MS		✓	
9000RAD-MSOP	✓		
DTS-GATEWAY-MSOP	✓		
E5300-MS			✓
HFCOM2-MSOP	✓		
RT5200-MS			✓
TW/RT110A-MS			✓
TW/RT5200-MS			✓
TW/RT5300-MS			✓
TW110A-MS			✓

Note: For a detailed list of Datron documentation, see the Manual section. For system documentation, contact your Datron Representative.

PRC1060/1070/1080 SQUAD RADIO

- 30.000-87.975 MHz
- 25 kHz Channel Spacing
- 2W RF Output
- Lightweight (less than 1.2 kg with battery)
- MIL-STD-810 Compliant
- Waterproof to 1 Meter
- 9 Memory Channels
- Integrated ECCM/COMSEC (PRC1080)

The PRC1060, 1070, and 1080 Squad Radios form the core of the Datron family of portable VHF/FM equipment which includes a complete range of handheld and vehicular configurations. A set of peripherals (mobile mounts, high-power RF booster amplifiers, keyfill devices) and a comprehensive set of accessories are also available to satisfy a broad range of customer requirements.

The PRC1060, 1070, and 1080 are designed for the foot soldier operating in a squad mission environment. Weighing less than 1.1 kg (2 1/2 lb.), they still offer the high-quality performance found in manpacks like the PRC1077 and PRC1088, and are completely interoperable in fixed-frequency modes. The Squad Radio is a lightweight portable unit providing either 100 mW or 2W in transmit mode, or in a mobile configuration mounted in a convenient docking station with or without an accessory 35W RF booster amplifier. The variable power output feature allows the user to balance range requirements against battery drain and select the most appropriate level for the mission need at any given moment.

The PRC1080 has the same frequency coverage as the PRC1088 and the new Spectre V manpacks. Like these full-sized radios, it features full-band frequency hopping and digital encryption capabilities. The interoperability among the PRC1080, PRC1088, and the PRC2100V equipment configurations allows use of the transceivers in a common network. Either keyfill device, the KF1088 or the KF2100, is used to program frequency, ECCM and COMSEC information into the PRC1080. The same frequency plans, hopping, and encryption keys can be loaded into the handheld and the manpacks, thus allowing deployment of both transceiver types as needed on the same mission in a single or multiple nets.

Squad Radios

PRC1060
VHF FM synthesized handheld transceiver, 100 mW to 2W (2 selectable outputs; front panel adjustable), 30.000-87.975 MHz, 25 kHz channel spacing, 9 memory channels. The PRC1060 is a sophisticated, fixed frequency radio covering the entire tactical military VHF band. Intended for rugged operating conditions, the radio meets MIL-STD-810 for shock, vibration, and immersion. The basic PRC1060 includes the radio, battery box (for standard H4595 1.8 AH NiCd), flexible broadband rubber "duck" antenna, and operator manual.

Note: The PRC1060 has been designed to preclude an upgrade path to internal hopping or digital encryption. This radio does not require a U.S. State Department export license.

PRC1070
Identical to the PRC1060 with additional upgrade path to internal, full-band frequency hopping and encryption.

Note: U.S. State Department export license is required for shipment of the PRC1070 radio outside of the United States.

PRC1080
VHF FM frequency-hopping handheld transceiver with digital encryption, 100 mW to 2W (2 selectable outputs; front panel adjustable), 30.000-87.975 MHz, 25 kHz channel spacing, 9 memory channels. The PRC1080 is a sophisticated radio covering the entire tactical military VHF band. Intended for use in severe electronic warfare (EW) operating conditions, the radio is fully interoperable with the PRC1088 and the Spectre V-series of manpacks, and meets MIL-STD-810 for shock, vibration, and immersion. The basic radio includes the radio, battery box (for standard H4595 1.8 AH NiCd), and flexible broadband rubber "duck" antenna.

Note: U.S. State Department export license is required for shipment of the PRC1080 radio outside of the United States.

COLOR
The PRC1060, PRC1070, and PRC1080 are available in three colors: olive drab (GRN), black (BLK), and gray (GRY). When ordering, you must supply the color desired. Use the three character color designator along with the base product as follows: PRC10x0AAA where "x" can be a 6, 7, or 8 and AAA represents the color.

Product	DWC P/N
PRC1060 Gray	PRC1060GRY
PRC1070 Olive Drab	PRC1070GRN
PRC1080 Black	PRC1080BLK

Note: The PRC10x0 designator does not exist as a separate product. You must include the color designator as part of the order.

Upgrade Kit

1080KIT
Upgrade kit that allows conversion of a PRC1070 to a PRC1080 in the field.

Crypto Management Systems

1080ADPT
Adapter that connects to KF1088 or KF1088B to allow using them with the PRC1080.

1088CD
Cloning device that allows filling one KF1088B from another KF1088B.

C992303
Interface cable between KF1088B and computer. Used when downloading fill data from computer to keyfill device. Included with CMS1088.

CMS1088
Complete crypto management system, includes application software that allows the system administrator to create hop plans and encryption keys for the PRC1080. Runs on a standard PC (486 processor or greater with 16 MB memory). Includes interface cable C992303 and a rugged laptop computer.

Note: For application information on using the CMS1088, 1088CD, and KF1088B, refer to the PRC1088 section. To order only the application software, contact your Datron Representative.

KF1088
Standalone programming and keyfill device used to program and load ECCM and COMSEC fill information in the PRC1088 and PRC1080. Connection is made to the PRC1080 through a six-pin adapter (order separately). The KF1088 is completely programmable from its keyboard. Power for the KF1088 comes from internal lithium batteries (BR2/3A). The KF1088 includes a built-in test feature.

KF1088B
"Dumb" fill device meant to be used with CMS1088 Crypto Management System. Designed to accept fill data from computer and download it to a PRC1080 using the 1080ADPT. It can also be used to fill the PRC1088 or another KF1088B (using the 1088CD cloning device).

Note: U.S. State Department export license is required for shipment of the KF1088 or KF1088B Keyfill Device outside of the U. S.

Batteries for the PRC1060/70/80

H4595
Recommended 7.2 Vdc 1.8 AH NiCd rechargeable battery.

NTN4905A
Lithium, 7.5 Vdc 2.4 AH non-rechargeable, primary battery.

Battery Chargers for the PRC1060/70/80

BC1060-110
Single unit battery charger for H4595; 115 VAC input.

BC1060-220
Single unit battery charger for H4595; 230 VAC input.

BC1060-6-110
Six unit battery charger for H4595; 115 VAC input.

BC1060-6-220
Six unit battery charger for H4595; 230 VAC input.

Carrying Accessories for the PRC1060/70/80

ST1060BLK
Squad radio carrying case, black. Protective bag for the PRC1060/1070/1080 family of radios.

ST1060GRN
Squad radio carrying case, olive drab. Protective bag for the PRC1060/1070/1080 family of radios.

Audio Accessories for the PRC1060/70/80

H3M
Headset with boom microphone. Single earphone, low profile. Will fit under GI Kevlar helmet with clip-on, push-to-talk switch.

HS1060
Lightweight, low-profile headset for hands-free operation. Fits easily under helmet. Waterproof microphone and earpiece with sealed headband for harsh environments. Comes complete with finger operated, sealed PTT switch with Velcro strap mounting and standard MIL-audio radio mating connectors.

H2100
Ruggedized headphone, lightweight, waterproof, single-earpiece, waterproof PTT switch, and clothing clip. Fits under helmet.

MHS
U.S. Military-style H-189/U-type handset with military-type connector.

Manpack Antennas

AT892BB-ADPT
Broadband 1.2m (3.9 ft.) flexible tape whip antenna. Includes modified AT-892/U collapsible antenna with gooseneck base and broadband antenna matching unit.

RUBANTBB
Flexible, broadband rubber "duck" antenna with "N" connector. Supplied with each radio.

VEHICULAR CONFIGURATIONS FOR THE PRC1060/1070/1080 SQUAD RADIO

- RF Output from 2-35W
- Low and High-Power Systems
- Waterproof to 1 meter
- "Jerk-and-Run" Docking Station
- Convenient Vehicle Mounting
- Simultaneous Battery Charging

Vehicular Systems for the PRC1060/70/80

These are two basic vehicular system configurations using the Squad Radio, as shown in the following system diagrams.

Low-Power Mobile Station

A +12 Vdc, 2W configuration that uses the Squad Radio with the MT1060DS Docking Station to provide a convenient way to mount the radio in the front part of a vehicle where the driver can also operate the radio. It provides for external microphone and loudspeaker connection. It also allows charging of an attached radio battery via the antenna port while the radio is mounted.

High-Power Mobile Station

A +24 Vdc, 35W configuration that uses the Squad Radio with both the MT1060DS and the MT1060MM Mobile Mount to provide a high-power vehicular system. The MT1060MM can be mounted remotely in the rear of the vehicle. It includes power conditioning circuitry and a 30W RF booster amplifier.

Vehicular Mounts for the PRC1060

MT1060DS

The MT1060DS is a compact mobile mount for the Squad Radio. It holds one radio plus battery and is designed to mount between, or immediately in front of, the front seats of any vehicle. Since the radio receives its input +12 Vdc power from the vehicle, it is not necessary to have a battery in the battery box. However, if a battery is installed in the battery box, it will be automatically charged while the radio is in the docking station. A coaxial cable is used to route the RF from the radio antenna port to the vehicular broadband antenna. An external speaker and microphone can be connected to the MT1060DS.

MT1060MM

The MT1060MM is a RF booster amplifier, power conditioner, and power supply packaged in an environmentally rugged case. The MT1060MM, used in conjunction with the MT1060DS, provides a 30W vehicular station for the Squad Radio. The MT1060MM is designed to be mounted in inaccessible locations in the vehicle as there are no controls on it. It is powered from the raw +28 Vdc vehicle power and can provide the required +12 Vdc output to drive the MT1060DS.

Vehicular Antennas for the PRC1060/70/80

4242-MK2

A 30.000-87.975 MHz broadband mobile whip antenna which is center fed, ground independent, and omnidirectional. Length is 3.2m. Order connecting RF cable C991577 separately.

12 Vdc, 2W, Squad Radio Mobile System

Item	Quantity Supplied	DWC P/N	Description
1	1	PRC10x0AAA	Transceiver, VHF handheld, 100 mW-2W, 30.000-87.975 MHz.
2	1	MT1060DS	Docking station, squad radio.
3	1	4242-MK2	Antenna, vehicular, broadband.
4	1	LS-R	External loudspeaker.
5	1	MHS	Handset, military style H-189/U-type.
6	1	C991577	MT1060DS to 4242-MK2, RF cable.
7	1	C991720	MT1060DS to dc power cable.
8	1	C992078	PRC10x0AAA to MT1060DS, RF cable.
9	1	C992079	PRC10x0AAA to MT1060DS, control cable.

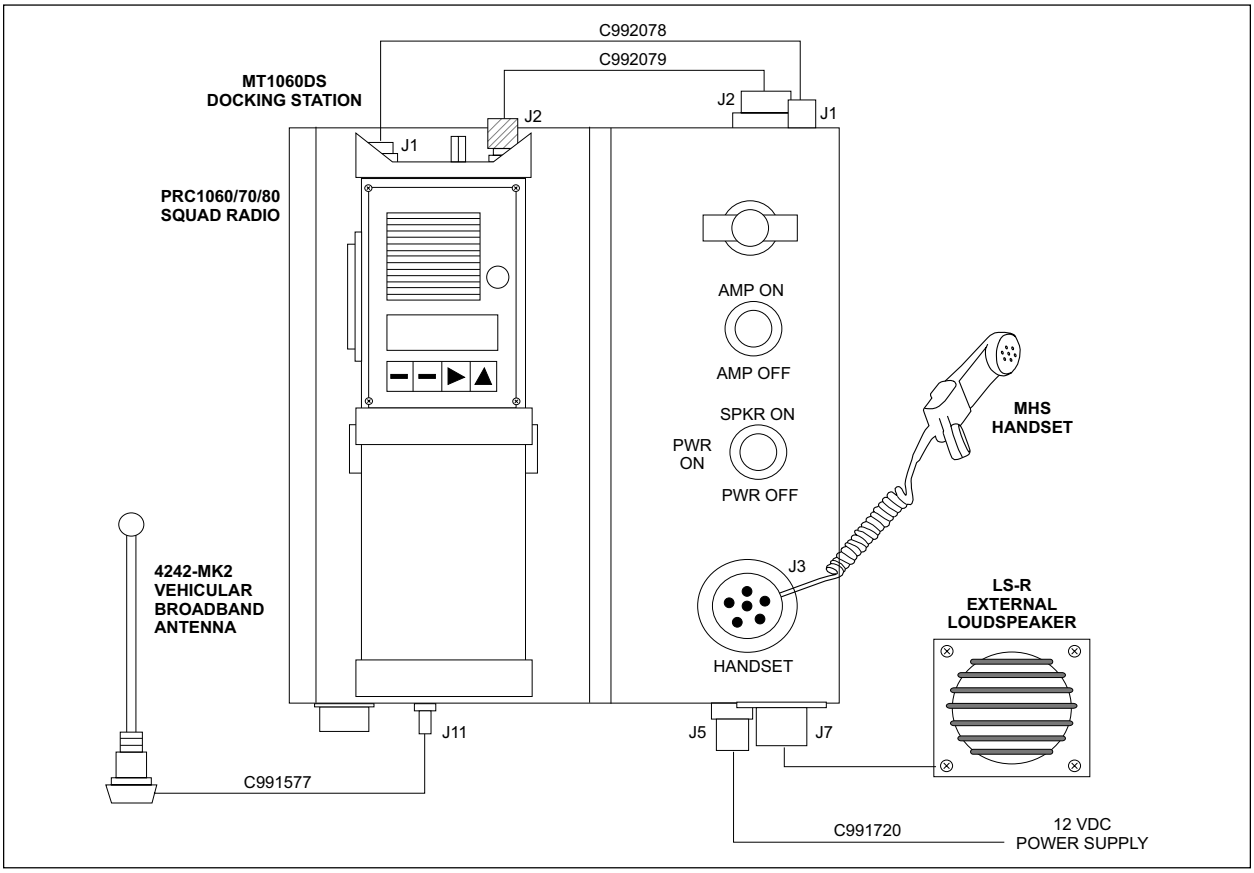

Note: For instructions on how to specify product number, see the section on "Color."

24 Vdc, 30W, Squad Radio Mobile System

Item	Quantity Supplied	DWC P/N	Description
1	1	PRC10x0AAA	Transceiver, VHF handheld, 100 mW-2W, 30.000-87.975 MHz.
2	1	MT1060MM	30W RF Amplifier and 24V power conditioner.
3	1	MT1060DS	Docking station, squad radio.
4	1	4242-MK1	Antenna, vehicular broadband.
5	1	LS-R	External loudspeaker.
6	1	MHS	Handset, military style H-189/U-type.
7	1	C991577	MT1060MM to 4242-MK2, RF cable.
8	1	C991580	MT1060DS to MT1060MM, dc power cable.
9	1	C992078	PRC10x0AAA to MT1060DS, RF cable.
10	1	C992079	PRC10x0AAA to MT1060DS, control cable.
11	1	C992080	MT1060DS to MT1060MM, control cable.
12	1	C992111	MT1060DS to MT1060MM, RF cable.

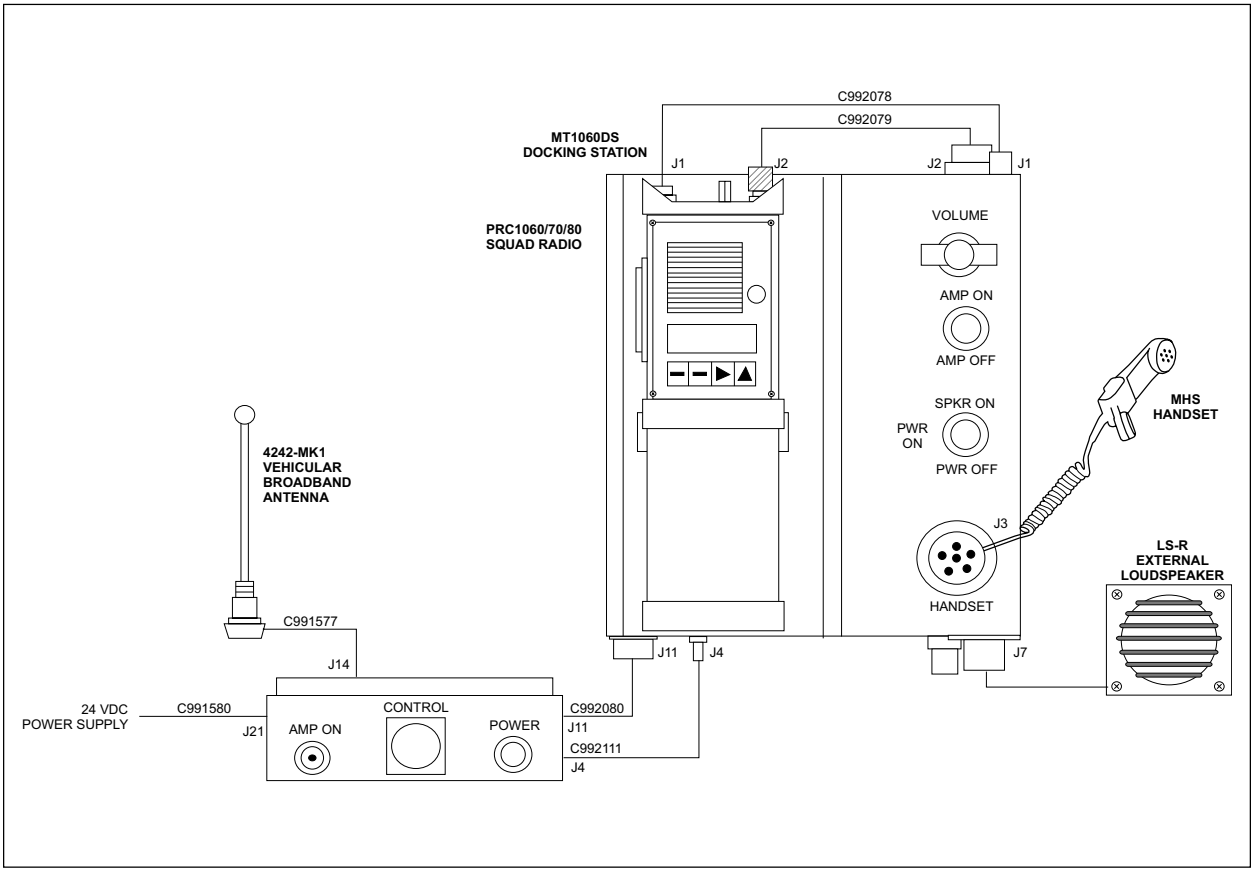

Note: For instructions on how to specify product number, see the section on "Color."

PRC1060/1070/1080 SQUAD RADIO CABLES, SPARES, AND MANUALS

Cables for the PRC1060/70/80

All cables come complete with connectors unless indicated otherwise.

DWC P/N	Description
C991577	BNC connectors, RF, 5m.
C991580	Open-ended, dc power, 3m.
C991720	Dc input power from vehicle to MT1060DS, pigtail on vehicle end, 1m.
C992078	MT1060DS to radio, RF coaxial, 0.2m.
C992079	MT1060DS to radio, control, 0.3m.
C992080	MT1060DS to MT1060MM, control, 2m.
C992111	MT1060DS to MT1060MM, RF coaxial, 2m.

Note: Standard length of each cable is indicated in cable description. To order nonstandard cable lengths, contact your Datron Representative.

Spares Kits for the PRC1060/70/80

DWC Product	Module Kit (MK)	Module Repair Kit (MRK)	Parts Spares Kit (PSK)
MT1060DS	-MK	-MRK	-PSK
MT1060MM	-MK	-MRK	-PSK
PRC1060	-MK		PSK[2]
PRC1070	-MK[1]		
PRC1080	-MK[1]		

Note: To order an individual spares kit, add the appropriate suffix (i.e., -MK, -MRK, -PSK) to the product part number. For a complete list of Module Kit, Module Repair Kit, and Parts Spares Kit, see the Spares section.

1 The PRC1070 and PRC1080 MK's require a U.S. State Dept. License for export outside the United States.

2 The PRC1060 PSK supports the PRC1070 and PRC1080.

Spare Module Assemblies for the PRC1060/70/80

When ordering spare module assemblies specify module and serial number of equipment.

DWC P/N	Description
037-00100	RF Board, PRC1060/1070/1080
037-00200	Control Board, PRC1070/1080
037-00201	Control Board, PRC1060
037-06000	ECCM Board, PRC1080
037-11100	Display Board, PRC1060/70/80

Note: For information on spare subassemblies not listed, contact your Datron Representative.

Manuals for the PRC1060/70/80

DWC P/N	**Operator** (supplied with unit)	**Technical** (order separately)	**Operator/Technical** (supplied with unit)
CMS2100-MS			✓
KF1088B-MS			✓
MT1060DS-MS			✓
MT1060MM-MS			✓
PRC1060-MS		✓	
PRC1060-MSOP	✓		
PRC1070/80-MS		✓	
PRC1070/80-MSOP	✓		

Note: For a detailed list of Datron documentation, see the Manual section. For system documentation, contact your Datron Representative.

PRC1077 TACTICAL VHF FM MANPACK RADIO

- 30.000-87.975 MHz
- 25 kHz Channel Spacing
- Simplex/Semi-Duplex
- 10 Memory Channels
- MIL-STD-810 Compliant
- 300 mW/2 W/5W Output Power
- Low Battery Drain
- Microprocessor Controlled

The PRC1077 is a tactical VHF/FM radio used by defense organizations around the world. Originally designed as a drop-in replacement for the AN/PRC-77, the PRC1077 is a high performance, rugged 30 to 87.975 MHz transceiver used for reliable portable and mobile communications in harsh environments. It has been thoroughly tested and evaluated by several DOD agencies and found to be fully interoperable with the AN/PRC-77, and with SINCGARS in all non-hopping and non-secure modes. The transceiver has been put into service and used extensively by several nations and has consistently delivered superior performance in the broad range of environmental conditions encountered throughout the world.

The PRC1077 is easy to use, provides extremely long mission life due to its low-power consumption, and accommodates an internal voice privacy module to allow for secure communications. It has a high performance receiver, a wide-temperature range LCD, 10 preset memory channels, 25 kHz spacing, and is packaged in 7 easily-removable and repairable modules providing quick and easy maintenance.

A full range of operating configurations are available using the PRC1077. They include: mobile systems at both the 5W and 50W levels, a variety of portable and mobile mounting arrangements, and an extended control system. The PRC1077 is completely interoperable with the PRC1060 handheld transceiver, the PRC1080, and PRC1088 in all fixed frequency modes. Although the transceiver retains the same form, fit and function of the AN/PRC-77, the advanced design provides the user the capability to modernize their tactical VHF system without obsoleting their extensive inventories of accessories and ancillary equipment.

Tactical Manpack PRC1077 Radios

PRC1077
VHF FM synthesized transceiver 0.3/2/5W, 30-87.975 MHz, simplex/semi-duplex operation, 10 preset memory channels. Designed to the requirements of MIL-STD-810 for operation under severe vibration and shock environments. Waterproof unit fully operational over -40°C to +60°C. The PRC1077 is dimensionally identical to the U.S. military standard AN/PRC-77 and AN/PRC-25-series VHF tactical manpacks and weighs 4.7 kg without battery. It is fully interoperable with all U.S. standard audio accessories, antennas, and specialized accessories such as crypto equipment, audio remoting equipment, retransmission, and direction-finding equipment. NSN 5820-01-293-2131. The basic PRC1077 includes the radio, battery box, and an operator manual. A diagram of a typical manpack system is shown later in this section.

PRC1077-TS
Identical to the PRC1077 with additional "TACSEC" embedded tactical voice security module.

Note: U.S. State Department export license is required for shipment of the PRC1077-TS outside of the United States.

Option for the PRC1077

Prices include factory installation at the time the radio is ordered. For field installation, contact your Datron Representative.

PRC1077-ECO
Required for extended control of the PRC1077 (up to 30m) when used with the PRC1077-ECU extended control unit. Note: Is now a standard feature of the PRC1077.

Batteries for the PRC1077

BB-LA4.6
Sealed lead-calcium rechargeable battery (4.6 AH).

BB-LA6
Sealed lead-calcium rechargeable battery (6 AH).

BB-NC4
"D" size battery cassette for dry batteries or "D" NiCd cells. Cassette only; does not include batteries.

PRC-BCD-20
"D" size battery cassette and extended box for 20 cells. Cassette only; does not include batteries.

Battery Chargers/Power Supplies for the PRC1077

Different configurations of charging accessories and cables are illustrated later in this section.

PRC-BC4
Multiple battery charger. Charges up to four BB-series lead-calcium batteries simultaneously. Automatic rapid/taper charge characteristic. Individual charge status indicators. Includes three C991610 charging cables and C991609 dc power cable. 115/230 VAC, 24 Vdc input. Specify ac voltage when ordering.

PRC-HC-30
Hand-crank generator, 30W. For recharging 12 Vdc battery packs such as BB-series. Double handle. Use monopod or tree mount. Complete with C991611 adapter cable for charging battery installed in radio. Order C991618 cable to charge stand-alone battery.

PRC-HC-MP
Monopod mount. For PRC-HC-30 hand-crank generators. Unfolds to convenient operating height.

PRC-HC-TM
Tree mount with tree strap. For hand-crank generators.

PRC-PS
Power supply/battery charger for BB-series sealed lead-calcium battery pack. Will operate radio while charging internal battery and a second battery simultaneously. Automatic rapid/taper charge characteristic. Includes C991608 charging cable and C991609 dc power cable. 115/230 VAC, 24 Vdc input. Specify ac voltage when ordering.

PRC-SPU-10
Lightweight, fold-up, 10W solar panel. For recharging 12 Vdc battery packs such as BB-series. Complete with C991613 adapter cable for charging battery installed in radio. Order C991617 cable to charge stand-alone battery.

Charging Cables for the PRC1077

C991608
PRC-PS to radio power/charging cable.

C991609
PRC-PS input dc power cable.

C991610
PRC-BC4 to BBLA6 or BB-LA4.6 charging cable.

C991611
PRC-HC-30 to radio charging cable.

C991613
PRC-SPU-10 to radio charging cable.

C991617
PRC-SPU-10 to stand-alone battery charging cable.

C991618
PRC-HC-30 to stand-alone battery charging cable.

Audio Accessories for the PRC1077

All PRC1077 audio accessories are terminated with 5-pin, twist-lock, military-style connectors and are interchangeable among Datron military products.

DSP9000HS
Ruggedized, half-duplex audio ciphering handset. Normal operation is fully automatic; user simply selects Plain or Cipher mode.

H-140/U
H-140/U ruggedized headphones.

H-250/U
Noise canceling, non-repairable version of MHS.

Note: The H-250/U requires a U.S. State Department license for export.

H3M
Headset-boom microphone. Single earphone low profile. Will fit under GI Kevlar helmet with clip-on push-to-talk switch.

MHS
H-189/U military-style handset. Repairable.

Carrying Accessories for the PRC1077

LC-2
Tubular, lightweight, backpack carrying frame for manpack operation.

Manpack and Long-Range Antennas for the PRC1077

AT-271A/U
3m (10 ft.) folding whip antenna for extended range. Includes AB-591/U flexible antenna base.

AT-892/U
1.2m (3.9 ft.) flexible-tape whip antenna. Collapsible antenna with gooseneck base and broadband antenna matching unit. Attaches directly to the whip antenna mount on the radio and uses radio internal matching network. Can be used for any radio mode of operation.

OE-254/GRC
Broadband (30-87.975 MHz) portable omnidirectional antenna kit with mast and transit bag. Overall height approximately 13m (42 ft.). Provides 25 mile (40 km) to 36 mile (58 km) range.

Retransmission Equipment for the PRC1077

1077RETRAN
Cable kit used to interconnect two PRC1077s for use as a retransmission station in applications over long-range paths in rough terrain that cannot be spanned with a single line-of-sight link.

PRC1077 Manpack System

Item	Quantity Supplied	DWC P/N	Description
1	1	PRC1077	Transceiver, VHF FM, 30-87.975 MHz.
2	1	AT-892/U	Antenna, whip, flexible, 1.2m (3.9 ft.).
3	1	AT-271A/U	Antenna, whip 3m (10 ft.) with AB-591/U flexible base.
4	1	BB-LA4.6	Battery, rechargeable, 4.6 AH.
5	1	LC-2	Tubular, lightweight, backpack carrying frame.
6	1	MHS	Handset, military style H-189/U-type.

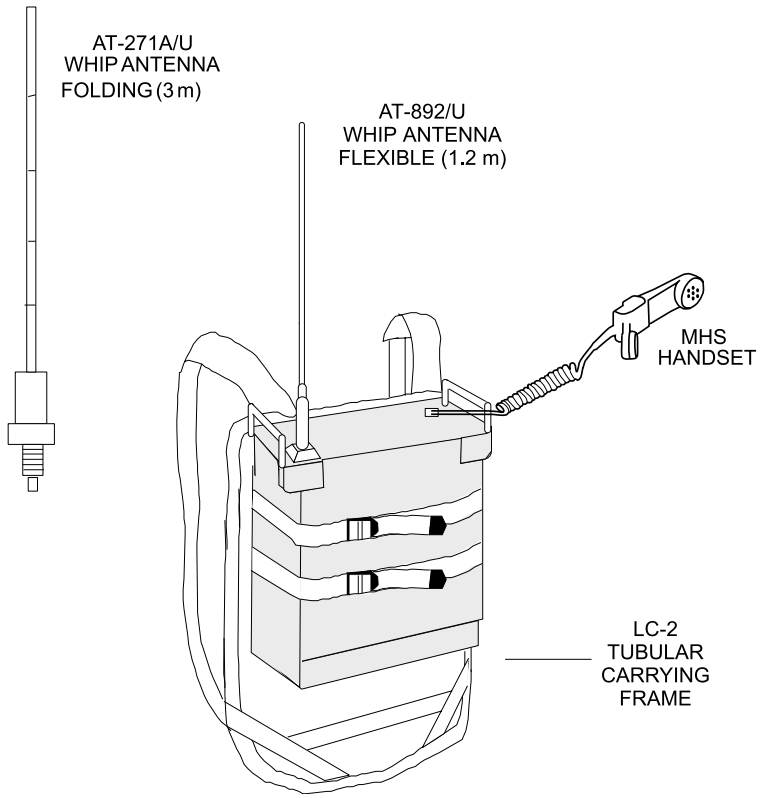

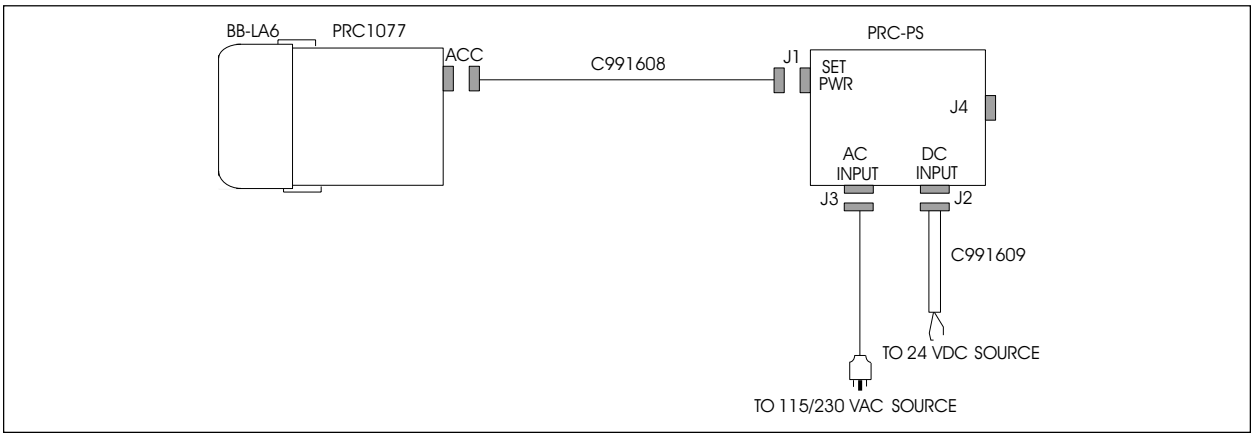

PRC-PS charging battery installed in PRC1077.

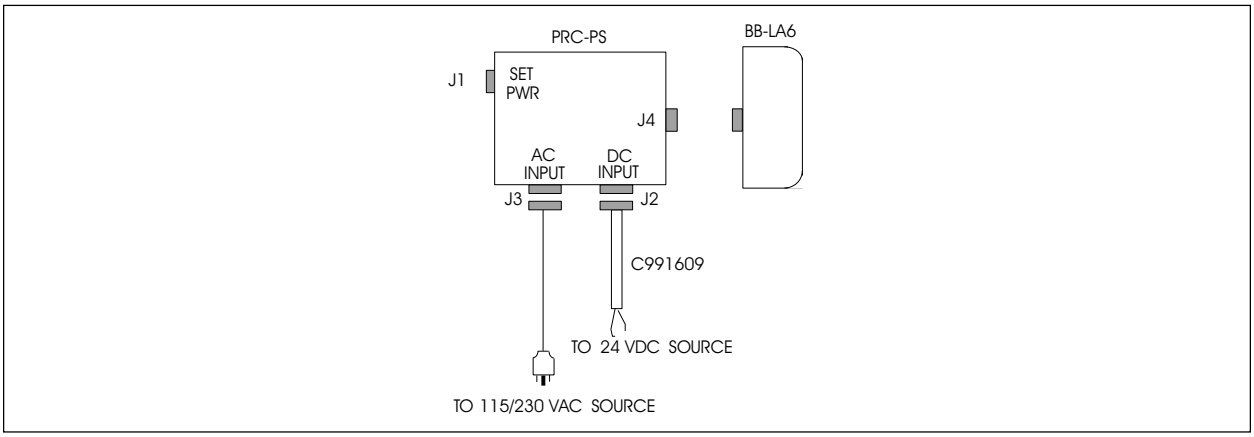

PRC-PS charging battery directly.

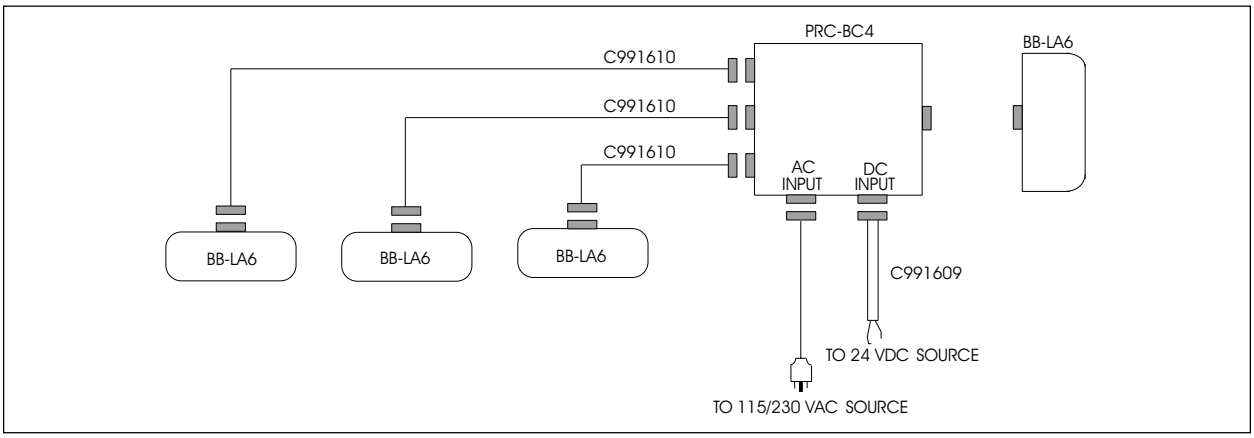

PRC-BC4 charging multiple batteries directly.

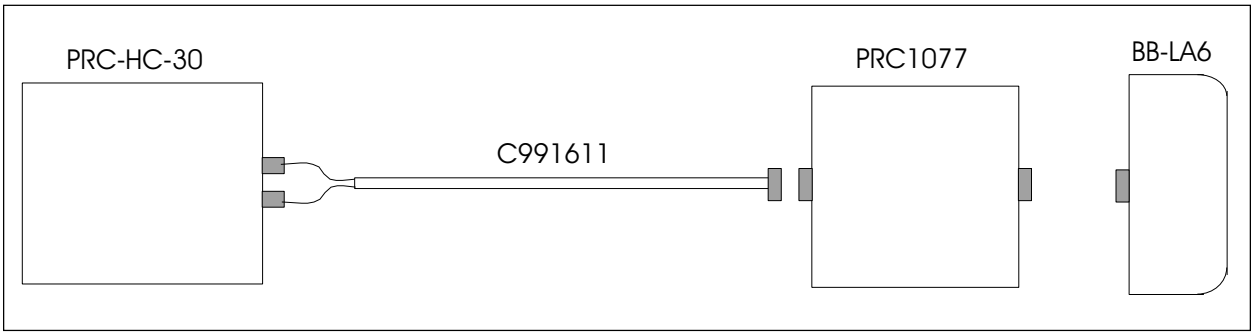

PRC-HC-30 charging battery installed in PRC1077.

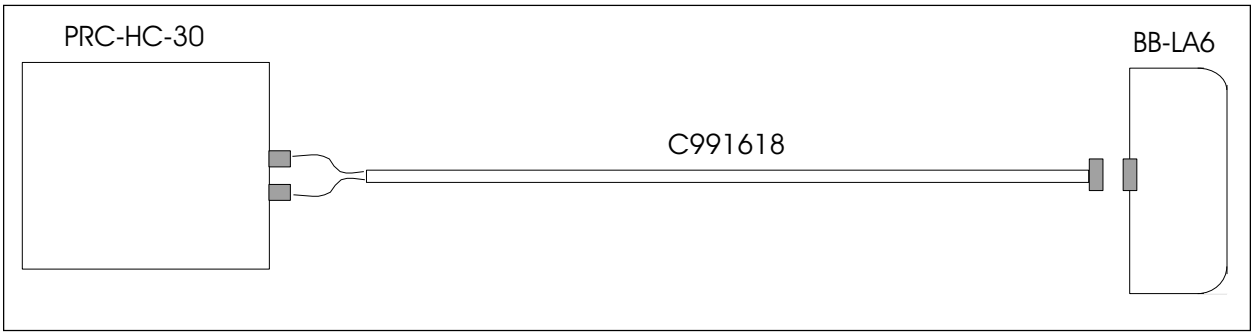

PRC-HC-30 charging battery directly.

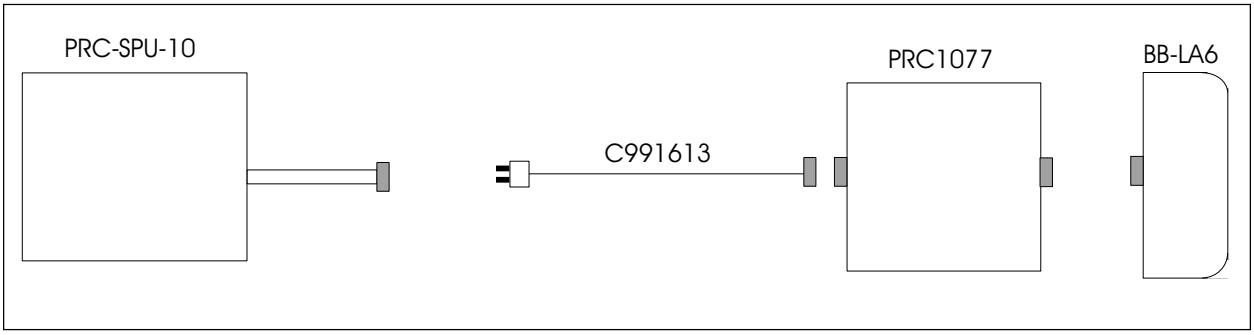

PRC-SPU-10 charging battery installed in PRC1077.

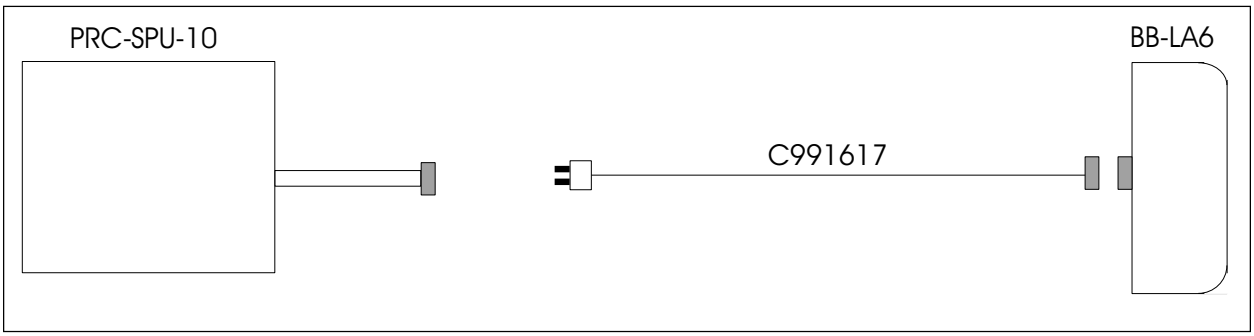

PRC-SPU-10 charging battery directly.

PRC1077 TACTICAL VHF FM VEHICULAR SYSTEMS

Low and high-power PRC1077 vehicular systems are available for +12 Vdc or +24 Vdc applications using the standard U.S. Military mount or one of DWC's mounts. Following in this section are typical mobile configurations.

PRC1077 System Descriptions	5 W	50 W	+12 Vdc	+24 Vdc	MIL Mount	DWC Mount	Portable
24 Vdc, 5W, Mobile System, with Broadband Antenna	✓			✓		✓	
24 Vdc, 5W, Mobile System, with Manpack Accessories, with Whip Antenna	✓			✓		✓	✓
24 Vdc, 50W, Mobile System, with Broadband Antenna		✓		✓		✓	
12 Vdc, 50W, Mobile System, with Broadband Antenna		✓	✓			✓	
24 Vdc, 5W, Mobile System, with U.S. Military Mount, and Broadband Antenna	✓			✓	✓		
24 Vdc, 50W, Mobile System, with U.S. Military Mount, and Broadband Antenna		✓		✓	✓		
24 Vdc, 5W, Mobile System, with Extended Control, and Broadband Antenna	✓			✓	✓		
24 Vdc, 50W, Mobile/Portable System, with Whip Antenna		✓		✓			✓

Vehicular Mounts and Adapters for the PRC1077

AM1077ADPT
Includes AM-1077 adapter box and handle clamps. Required when AM-1077 is used in MT-1077 mount. NSN 5340-01-296-4780.

MT-1029/VRC
Standard military shock mount for vehicular mounting of manpack radios.

MT-1077-12
12V vehicular adapter with shock mount. Interfaces with 4242-MK-series of broadband antennas used in configurations where drop-in interchangeability with AN/VRC-64 or AN/GRC-160 vehicular radios is required. Internal audio amplifier provided for use with PRC-77 (internally selectable). Order C991576 control cable and C991580 power cable separately.

MT-1077-24
24V vehicular adapter with shock mount. Interfaces with 4242-MK-series of broadband antennas used in configurations where drop-in interchangeability with AN/VRC-64 or AN/GRC-160 vehicular radios is required. Internal audio amplifier provided for use with PRC-77 (internally selectable). Order C991576 control cable and C991580 power cable separately. NSN 5975-25-137-8429.

OA3633/VRC
Standard U.S. Military 24V vehicle adapter with antenna control and loudspeaker. Fits in standard MT-1029/VRC military shock mount. Supplied with CX-4655/GRC radio control cable.

PS1077
20-32 Vdc power adapter/base. Provides convenient mounting base for PRC1077 and AM-1077. Ideal for portable applications. Complete with 1m (3 ft.) power cable (unterminated).

Amplifiers for the PRC1077

AM-1077
30-87.975 MHz, 50W power amplifier for PRC1077. 24 Vdc operation only. Switched harmonic and low-pass filters. Full compatibility with MT1077 mount which is required for installation. PRC1077/MT1077/AM-1077 combination is interchangeable with AN/VRC-12 and AN/VRC-46 radio families. Order C991575 RF cable and C991579 power cable separately. NSN 5820-01-300-7600.

AM-1077ATU
AM-1077 power amplifier with internal automatic antenna tuner for use with AT-271A/U 3m (10 ft.) whip antenna. Permits portable operation of PRC1077/AM-1077 high-power system with external portable power source.

Vehicular Antennas for the PRC1077

4242-MK1
30-87.975 MHz broadband, end fed, omnidirectional vehicular whip antenna. Should only be used where good ground plane exists. Length 3.2m (10.5 ft.). Order C991577 RF cable separately.

4242-MK2
30-87.975 MHz broadband, center fed, ground independent, omnidirectional vehicular whip antenna. Use on towers or small vehicles where poor ground plane exists. Length 3.2m (10.5 ft.). Order C991577 RF cable separately.

4257
Antenna vehicular mounting bracket. Ruggedized, open design allows easy access to antenna connections.

Vehicular Control and Audio Accessories for the PRC1077

LS-R
External loudspeaker for PRC1077.

PRC1077-ECSU
Extended control switching unit that provides audio interface for PRC1077-ECU when used with military OA3633/MT-1029 vehicular mount. Order control cable C991715.

PRC1077-ECU
Extended control unit for use with the PRC1077. Functions include: remote power on/off, speaker on/off, external speaker drive capability, squelch override, and PTT inhibit. Can also be used with the military PRC1077-ECSU. Maximum operating distance is 30m (100 ft.). Order control cable C991714.

Vehicular Power Accessories for the PRC1077

AM1077CONV
12 Vdc to 28 Vdc converter at 6 A continuous output. Allows use of AM-1077 amplifier in 12 Vdc vehicles. Mounts inside AM-1077 rear accessory box when used with MT-1077-12 mount. Order dc power cable C991658.

AM77CONV-A
Identical to the AM1077CONV with an additional connector for 24 Vdc output to MT-1077-24 mount. Order power cable C991670 and C991671.

C991659
Cable allows charging of two BB-series batteries from a 12 Vdc vehicle charging system.

PRC-CA12V
Power cable allows operation of radio from 12 Vdc source. Allows charging of lead-calcium battery pack in radio direct from 12 Vdc vehicle charging system. No lithium or dry battery charging.

RUPS100-12
12 Vdc power supply for MT-1077-12 with PRC1077 transceiver and optional AM-1077/CONV amplifier. Order C991614 power cable separately. Specify ac voltage when ordering.

UPS100-28
28 Vdc power supply for MT1077-24 with PRC1077 transceiver and optional AM-1077 amplifier. Order C991614 power cable separately. Specify ac voltage when ordering.

24 Vdc, 5W, Mobile System, with Broadband Antenna

Item	Quantity Supplied	DWC P/N	Description
1	1	PRC1077	Transceiver, VHF, tactical FM, 5W, 30-87.975 MHz.
2	1	4242-MK1	Antenna, broadband, vehicular.
3	1	MT-1077-24	Adapter, vehicle, 24 Vdc, with antenna control and loudspeaker.
4	1	MHS	Handset, military style H-189/U-type.
5	1	C991577	PRC1077 to 4242-MK1, RF cable.
6	1	C991580	MT-1077-24 to dc power cable.
7	1	C991949	PRC1077 to MT-1077-24, control and power cable.

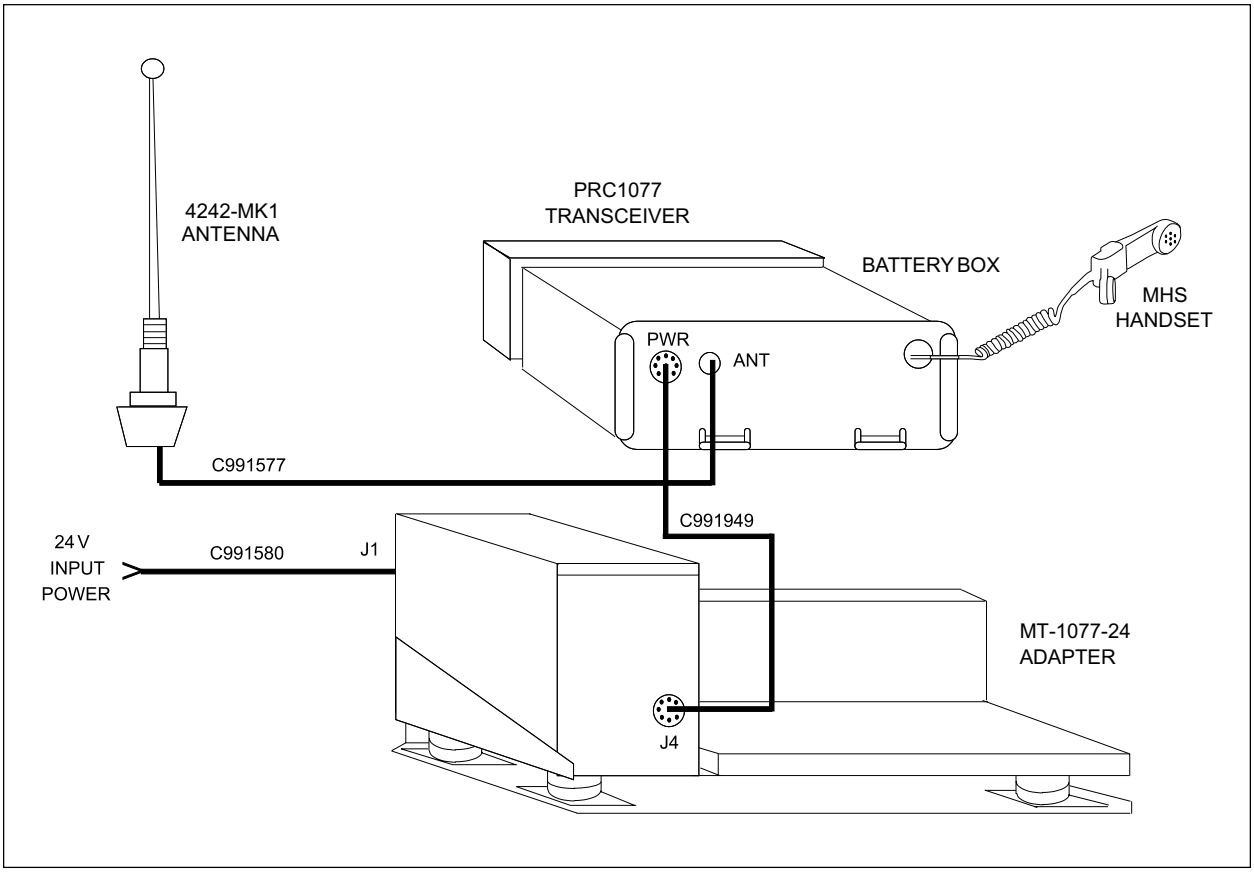

An updated version of the U.S. standard low-power vehicular radio system. Permits vehicular operation with power outputs up to 5W utilizing 24V vehicular power and the Datron MT-1077 vehicular adapter shock mount. A built-in loudspeaker, voltage regulator, power conditioner, and antenna control interface are provided. This unit utilizes all standard U.S. Military power, control, and RF cables. The mounting footprint is identical to the U.S. MT-1029.

24 Vdc, 5W, Mobile System, with Manpack Accessories, and Whip Antenna

Item	Quantity Supplied	DWC P/N	Description
1	1	PRC1077	Transceiver, VHF, tactical FM, 5W, 30-87.975 MHz.
2	1	4242-MK1	Antenna, vehicular, broadband.
3	1	AT-892/U	Antenna, whip, flexible, 1.2m (3.9 ft.).
4	1	AT-271A/U	Antenna, whip, 3m (10 ft.), with AB-591/U flexible base.
5	1	MT-1077-24	Adapter, vehicle, 24 Vdc, with antenna control and loudspeaker.
6	1	LC-2	Tubular, lightweight, backpack carrying frame.
7	1	BB-LA4.6	Battery, 4.6 AH, lead-calcium.
8	1	MHS	Handset, military style H-189/U-type.
9	1	C991577	PRC1077 to 4242-MK1, RF cable.
10	1	C991580	MT-1077-24 to dc power cable.
11	1	C991949	PRC1077 to MT-1077-24, control and power cable.

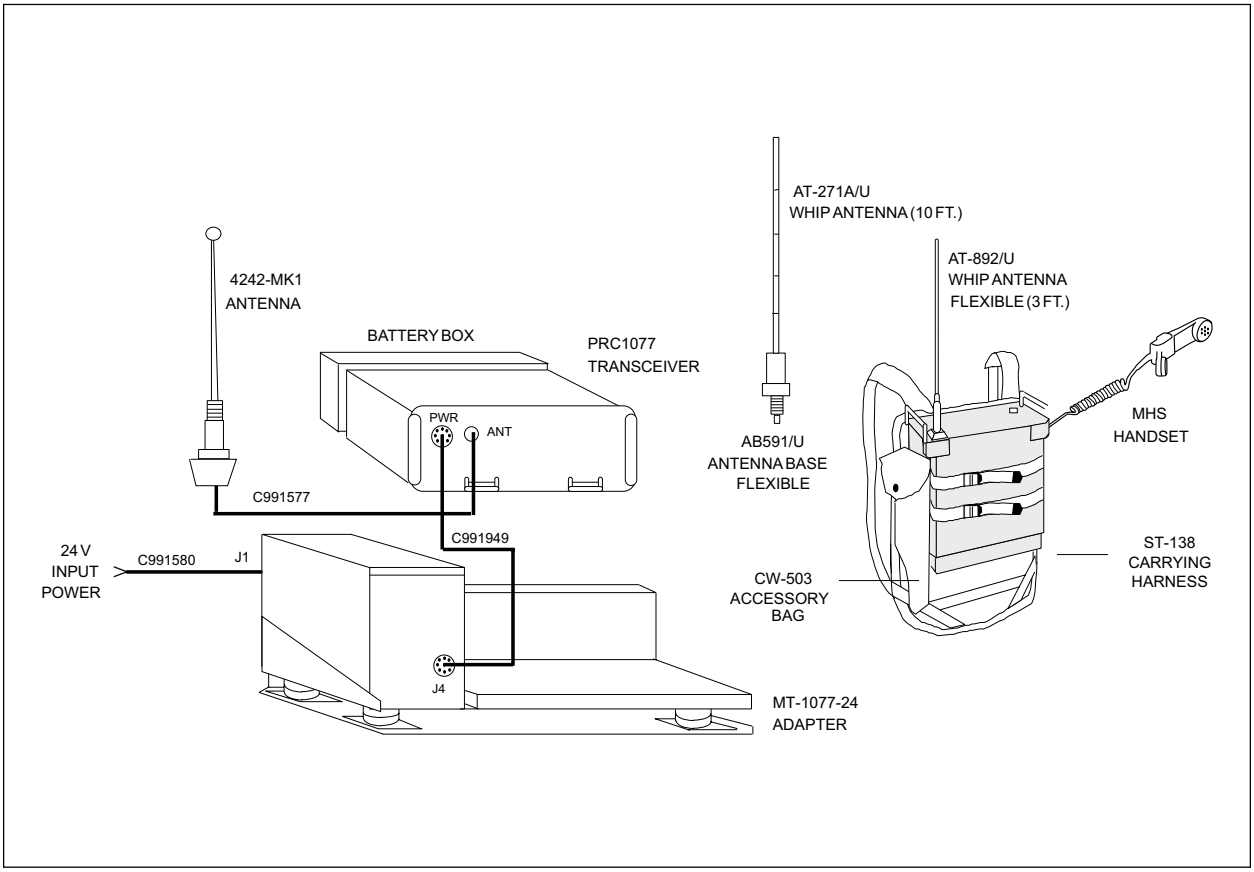

Identical to the VRC-64 version with additional accessories to convert the PRC1077 into a manpack configuration.

24 Vdc, 50W, Mobile System, with Broadband Antenna

Item	Quantity Supplied	DWC P/N	Description
1	1	PRC1077	Transceiver, VHF, tactical FM, 5W, 30-87.975 MHz.
2	1	AM-1077	Amplifier, power, VHF 50W, 30-87.975 MHz.
3	1	4242-MK1	Antenna, broadband, vehicular.
4	1	MT-1077-24	Adapter, vehicle, 24 Vdc, with antenna control and loudspeaker.
5	1	AM1077ADPT	AM-1077 adapter kit.
6	1	MHS	Handset, military style H-189/U-type.
7	1	C991575	PRC1077 to AM1077ADPT, RF cable.
8	1	C991577	AM1077ADPT to 4242-MK1, RF cable.
9	1	C991579	AM1077ADPT to MT-1077-24, dc power cable.
10	1	C991580	MT-1077-24 to dc power cable.
11	1	C991949	PRC1077 to MT-1077-24, control and power cable.

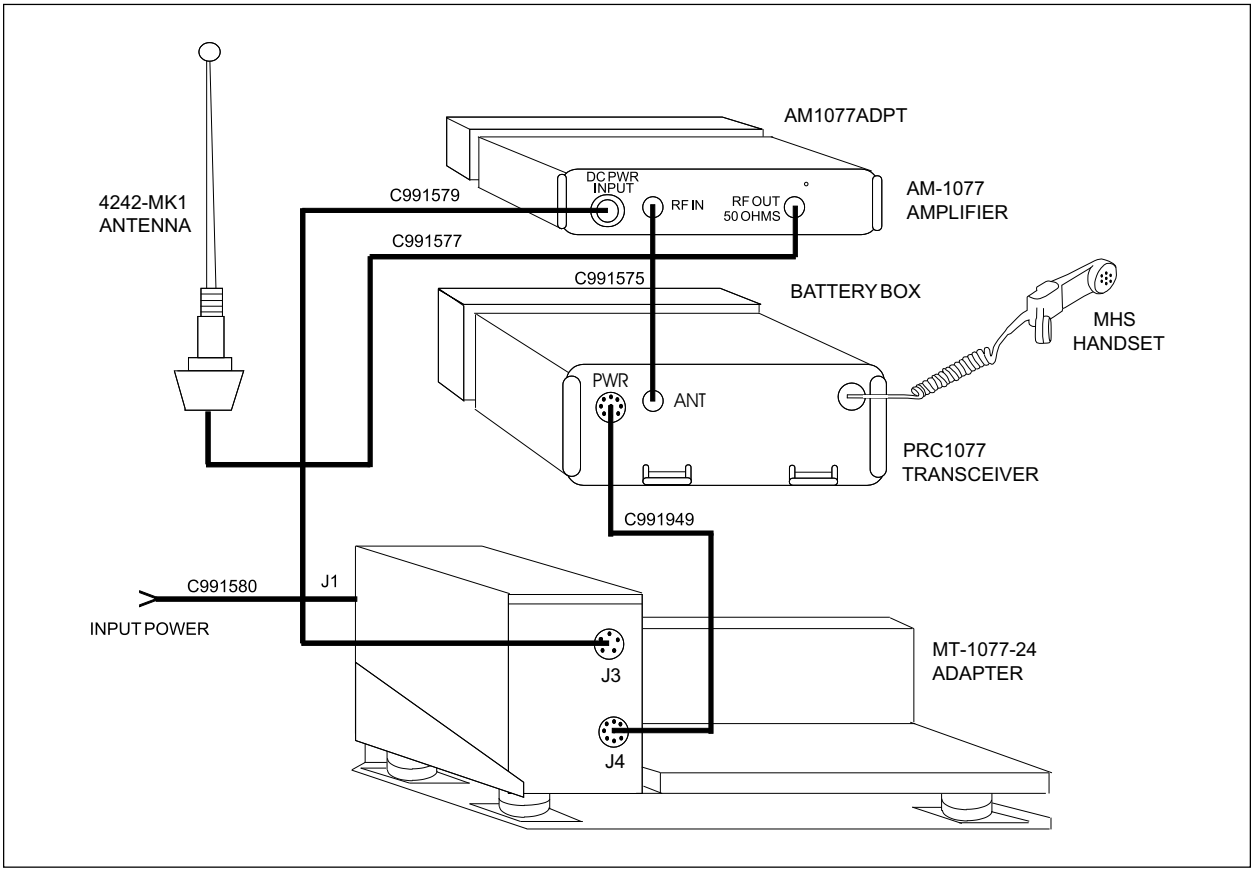

High-power configuration of PRC1077/VRC-64. Configuration adds AM-1077 50W power amplifier stack mounted on the MT-1077-24 vehicular adapter.

12 Vdc, 50W, Mobile System, with Broadband Antenna

Item	Quantity Supplied	DWC P/N	Description
1	1	PRC1077	Transceiver, VHF, tactical FM, 5W, 30-87.975 MHz.
2	1	AM-1077	Amplifier, power, VHF 50W, 30-87.975 MHz.
3	1	4242-MK1	Antenna, broadband, vehicular.
4	1	MT-1077-12	Adapter, vehicle, 12 Vdc, with antenna control and loudspeaker.
5	1	AM1077CONV	Voltage converter, AM-1077, 12 Vdc to 28 Vdc.
6	1	MHS	Handset, military style H-189/U-type.
7	1	C991575	PRC1077 to AM1077CONV, RF cable.
8	1	C991577	AM1077CONV to 4242-MK1, RF cable.
9	1	C991580	MT-1077-12 to dc power cable.
10	1	C991658	AM1077CONV to MT-1077-12, dc power cable.
11	1	C991949	PRC1077 to MT-1077-12, power and control cable.

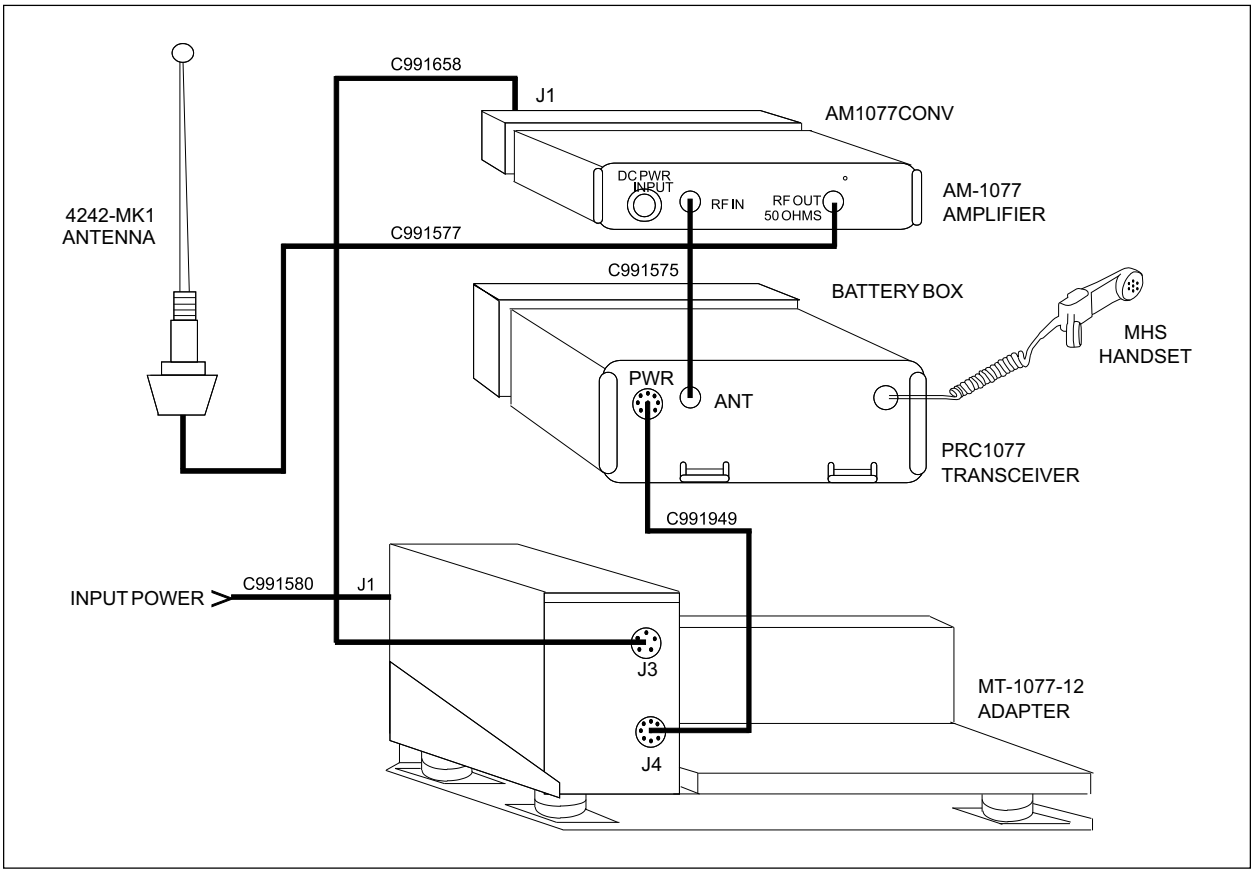

High-power 12 Vdc configuration of PRC1077/VRC-64. Configuration adds AM-1077 50W power amplifier stack mounted on the MT-1077-12 vehicular adapter.

24 Vdc, 5W, Mobile System, with U.S. Military Mount, and Broadband Antenna

Item	Quantity Supplied	DWC P/N	Description
1	1	PRC1077	Transceiver, VHF, tactical FM, 5W, 30-87.975 MHz.
2	1	4242-MK1	Antenna, vehicular, broadband.
3	1	OA3633/VRC	Adapter, vehicle, 24 Vdc, with antenna control and loudspeaker.
4	1	MT-1029/VRC	Mount, shock, electronic, U.S. mil. spec. equipped.
5	1	MHS	Handset, military style H-189/U-type.
6	1	C991577	PRC1077 to 4242-MK1, RF cable.
7	1	C991580	MT-1029/VRC to dc power cable.

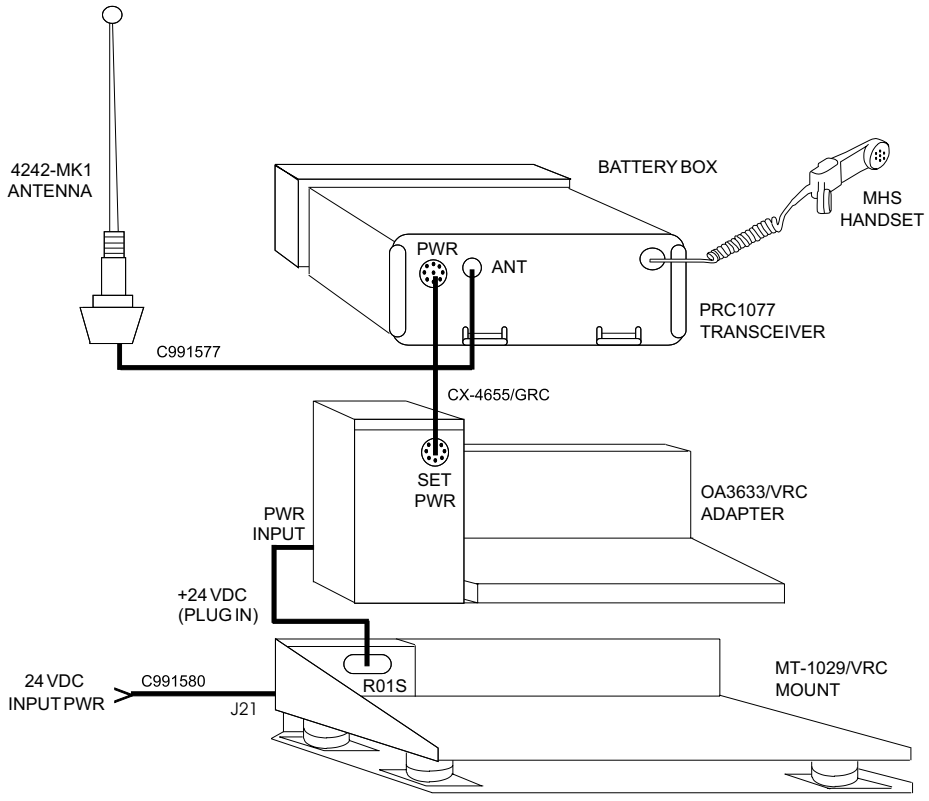

24 Vdc, 50W, Mobile System, with U.S. Military Mount, and Broadband Antenna

Item	Quantity Supplied	DWC P/N	Description
1	1	PRC1077	Transceiver, VHF, tactical FM, 5W, 30-87.975 MHz.
2	1	AM-1077	Amplifier, power, VHF, 50W, 30-87.975 MHz.
3	1	4242-MK1	Antenna, vehicular, broadband.
4	1	OA3633/VRC	Adapter, vehicle, 24 Vdc, with antenna control and loudspeaker.
5	1	MT-1029/VRC	Mount, shock, electronic, U.S. mil. spec. equipped.
6	1	AM1077ADPT	AM-1077 mobile adapter kit.
7	1	MHS	Handset, military style H-189/U-type.
8	1	C991575	PRC1077 to AM-1077, RF cable.
9	1	C991577	AM-1077 to 4242-MK1, RF cable.
10	1	C991580	MT-1029/VRC to dc power cable.
11	1	C991581	AM1077ADPT to MT-1029/VRC, power cable.

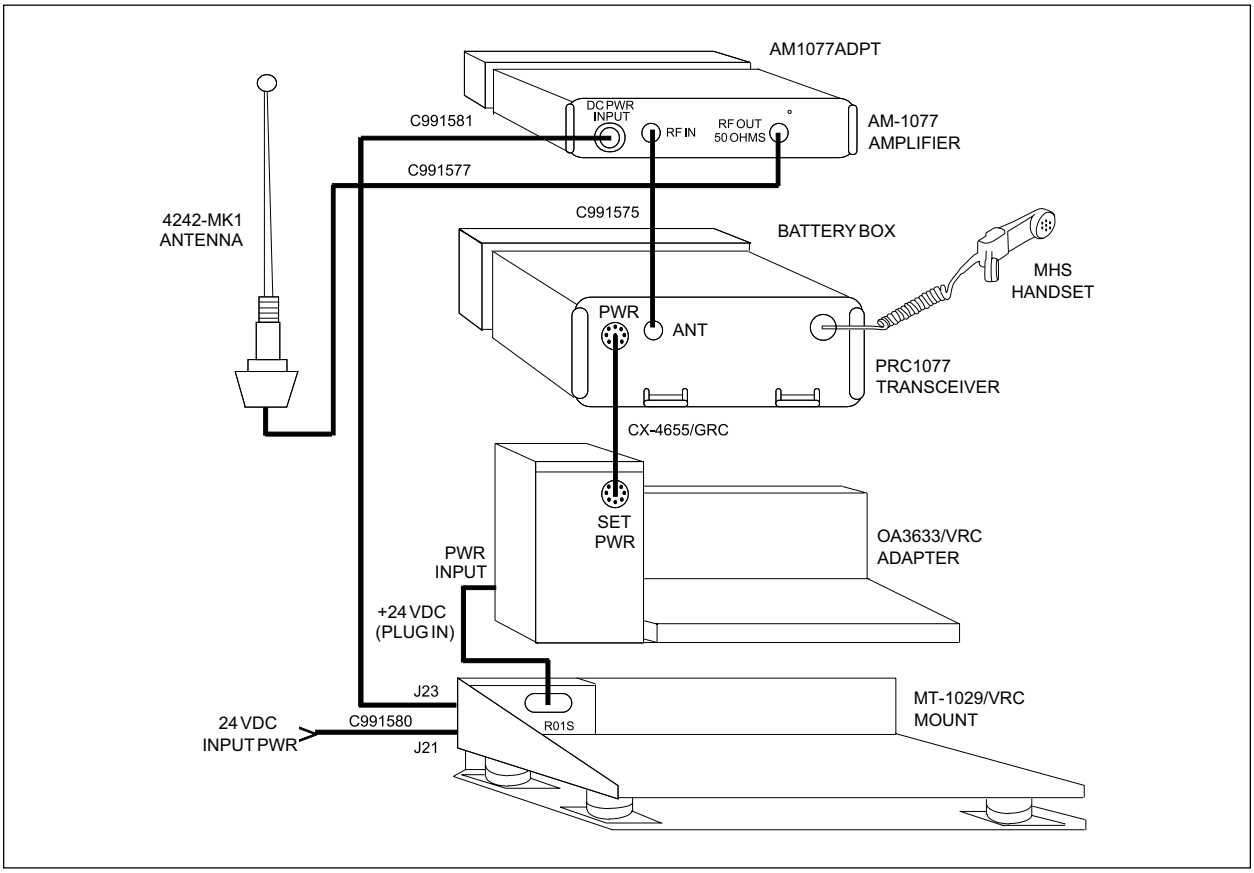

24 Vdc, 5W, Mobile System, with Extended Control, and Broadband Antenna

Item	Quantity Supplied	DWC P/N	Description
1	1	PRC1077	Transceiver, VHF, tactical FM, 5W, 30-87.975 MHz. Includes PRC1077-ECO, extended control transceiver interface unit.
2	1	PRC1077-ECU	Extended control unit.
3	1	PRC1077-ECSU	Extended control switching unit.
4	1	4242-MK1	Antenna, broadband, vehicular.
5	1	OA3633/VRC	Adapter, vehicle, 24 Vdc, with antenna control and loudspeaker.
6	1	MT-1029/VRC	Mount, shock, electronic, U.S. mil. spec. equipped.
7	1	1077ECSU/ OA3633MTPLT	PRC1077ECSU mounting plate.
8	1	MHS	Handset, military style H-189/U-type.
9	1	C991576	PRC1077-ECSU to OA3633/VRC control cable.
10	1	C991577	PRC1077 to 4242-MK1, RF cable.
11	1	C991580	MT-1029/VRC to dc power cable.
12	1	C991714	PRC1077-ECSU to PRC1077-ECU, control cable.
13	1	C991715	PRC1077 to PRC1077-ECSU, control cable.

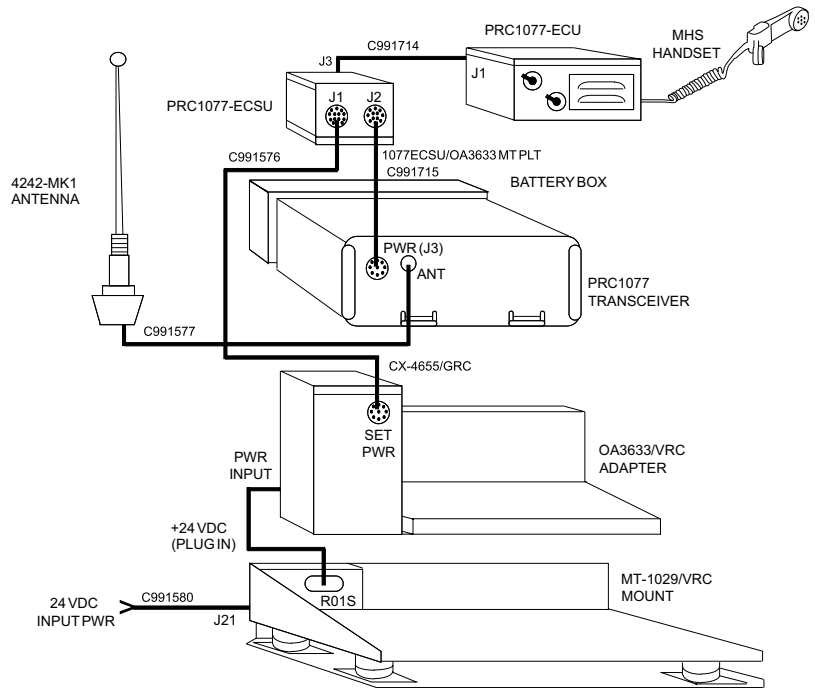

24 Vdc, 50W, Mobile/Portable System, with Whip Antenna

Item	Quantity Supplied	DWC P/N	Description
1	1	PRC1077	Transceiver, VHF, tactical FM, 5W, 30-87.975 MHz.
2	1	AM-1077ATU	Amplifier, AM-1077 RF power 50W, 30-87.975 MHz with internal antenna tuner.
3	1	AT-271A/U	Antenna, whip, 3m (10 ft.) with AB-591/U flexible base.
4	1	PS1077	Adapter, power 24 Vdc to 12 Vdc.
5	2	894131	Handle clamp.
6	1	MHS	Handset, military style H-189/U-type.
7	1	C991575	PRC1077 to AM-1077ATU, RF cable.

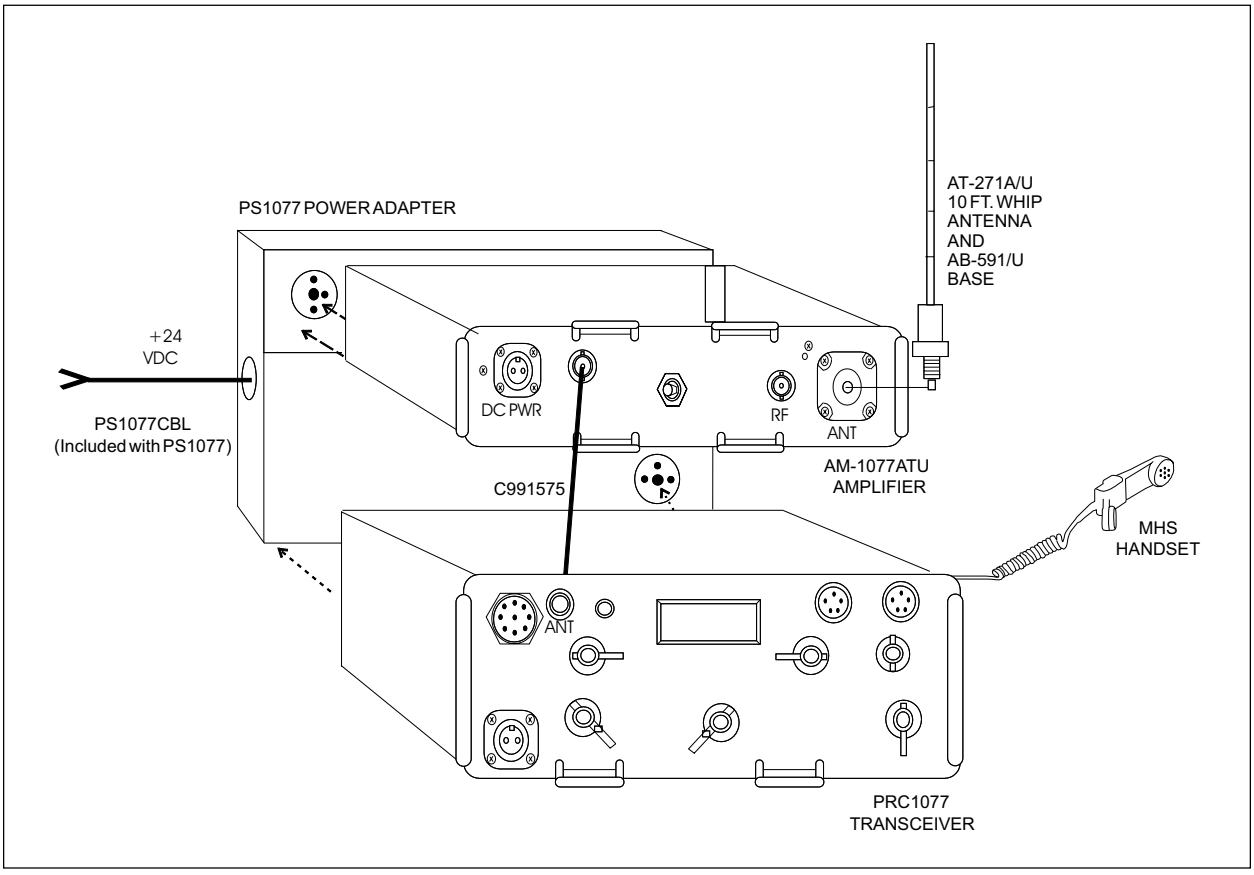

High-power mobile/portable system using the PRC1077 transceiver and AM-1077 ATU amplifier attached to the PS1077 power adapter.

PRC1077 TRANSCEIVER CABLES, SPARES, AND MANUALS

Cables for the PRC1077

All cables come complete with connectors unless indicated otherwise.

DWC P/N	Description
C991575	PRC1077 to AM-1077, RF, 0.2m.
C991576	PRC1077-ECSU to PRC1077-ECU, control, 0.3m.
C991577	BNC connectors, RF, 5m.
C991578	MT-1077 to antenna, control, 5m (CX4722), for AS-1729/VRC.
C991579	MT-1077 to AM-1077, power, 0.2m.
C991580	Open-ended, dc power, 3m.
C991581	AM-1077 to MT1029, power, 1m.
C991608	PRC-PS power/control, 1m.
C991609	PRC-PS and PRC-BC4, open-ended, dc power, 3m.
C991610	PRC-BC4 to BB-series, dc power, 1m.
C991611	PRC-HC-series, charging, 2m.
C991612	BB-series, adapter, 0.3m.
C991613	PRC-SPU-10, power, 2m.
C991614	UPS100-series, power, 1m.
C991617	PRC-SPU-10, charging, 1m.
C991618	PRC-HC-30 to BB-LA6, charging, 1m.
C991658	MT-1077 to AM1077CONV, power, 1m.
C991659	BB-series, open-ended, charging, 3m.
C991670	12V Input to AM77CONV-A, power, 3m.
C991671	AM77CONV-A to MT-1077-24, power, 0.6m.
C991714	PRC1077-ECU to PRC1077, PRC1077-ECU to PRC1077-ECSU, control, 10m.
C991715	PRC1077-ECSU to PRC1077, control, 0.3m.
C991949	Radio to mount, control/power, 0.3m.
C992129	PRC1077 to RT5850, control, 0.9m.
CX-4655/ GRC	PRC1077 to OA3633, control, 0.314m.

Note: Standard length of each cable is indicated in cable description. To order nonstandard cable lengths, contact your Datron Representative.

Spares Kits for the PRC1077

DWC Product	Module Kit (MK)	Module Repair Kit (MRK)	Parts Spares Kit (PSK)
AM-1077	✓	✓	✓
MT-1077-12	✓	✓	✓
MT-1077-24	✓	✓	✓
PRC1077	✓	✓	✓
PRC1077-TS	✓	✓	✓
PRC-BC4	✓	✓	✓
PRC-PS	✓	✓	✓
PS1077	✓	✓	✓
RUPS100-12			✓
UPS100-28			✓

Note: To order an individual spares kit, add the appropriate suffix (i.e., -MK, -MRK, -PSK) to the product part number. For a complete list of Module Kit, Module Repair Kit, and Parts Spares Kit, see the Spares section.

Spare Module Assemblies for the PRC1077

When ordering spare module assemblies specify module and serial number of equipment.

DWC P/N	Description
1077KY-M1	Audio Module, PRC1077
1077KY-M2	Synthesizer Module, PRC1077
AM1077PA	PA/Filter Module, AM1077
PRC1077-M3	Processor Module, PRC1077
PRC1077-M4	PA Module, PRC1077
PRC1077-M5	Receiver Module, PRC1077
PRC1077-M6	Display Module, PRC1077
PRC1077-M7	Tuner Module, PRC1077
TW100-M8A	Regulator Assembly, MT1077-24

Note: For information on spare subassemblies not listed, contact your Datron Representative.

Manuals for the PRC1077

DWC P/N	**Operator** (supplied with unit)	**Technical** (order separately)	**Operator/Technical** (supplied with unit)
AM-1077-MS		✓	
AM-1077-MSOP	✓		
MT-1077-MS			✓
PRC1077-ECU/ECSU-MS			✓
PRC1077-MS		✓	
PRC1077-MSOP	✓		
PRC-BC4-MS			✓
PRC-HC-MS			✓
PRC-PS-MS			✓
PRC-SPU-10-MS			✓
PS1077-MS			✓
RUPS100-12-MS			✓
UPS100-28-MS			✓

Note: For a detailed list of Datron documentation, see the Manual section. For system documentation, contact your Datron Representative.

PRC1088 TACTICAL VHF FM MANPACK RADIO

- 30.000-87.975 MHz
- 25 kHz Channel Spacing
- 9 Memory Channels
- MIL-STD-810 Compliant
- 300 mW/2W/5W Output Power
- Low Battery Drain
- Full-Band Frequency Hopping and Digital Encryption

The PRC1088-series is a full featured 30 to 87.975 MHz VHF/FM radio family that provides user reliable operation in four modes: fixed frequency, fixed frequency/secure, frequency hopping, and frequency hopping/secure. In order to satisfy a broad range of field applications, the PRC1088 is offered in manpack, vehicular, and fixed station configurations.

The PRC1088 is rugged and reliable (MIL-STD-810 compliant), easy to operate and maintain, and has a comprehensive BITE system to facilitate rapid fault detection. Both voice and data can be encrypted using the radio's built-in digital encryption capability. The sophisticated hopping algorithm employed in the radio is used to counter enemy jamming threats. Multiple hopping networks can be set up (interlaced to provide orthogonality) and spread over the full 30 to 87.975 MHz frequency band.

The vehicular version of the system uses the PRC1088 as the core of a high-power, tactical, mobile system that also includes a companion 50W RF amplifier. The system is configured so the radio can be quickly removed from the vehicle mount if required for rapid, "jerk-and-run" deployment as a manpack.

The PRC1088 is fully compatible with the AN/PRC-77, PRC1077, PRC1060 in fixed frequency modes, and the PRC1080 in hopping and secure modes. The vehicular PRC1088 system is compatible with the AN/VIC1/2 intercom set, and meets both MIL-STD-1275 and applicable parts of MIL-STD-461A to ensure operation in multiple vehicles and harsh environments.

Tactical Manpack PRC1088 Radio

PRC1088
30 to 87.975 MHz VHF/FM full-band frequency hopping transceiver with internal digital encryption. 2 selectable RF power levels; 100 mW to 5W (internally adjustable). Synthesized in 25 kHz steps providing 2320 channels. Programmable from the front panel for selection of any of nine preset channels.

Channel scanning, complete BITE to the module level and simplex operation. Compatible with all VHF/FM radios including the AN/PRC-77, PRC1077, and PRC1060 in fixed frequency modes, and completely interoperable with Datron's PRC1080 in hopping and encrypted modes. Basic PRC1088 includes the transceiver, battery box, and operator manual. A typical manpack system is illustrated later in this section.

Note: U.S. State Department export license is required for shipment of the PRC1088 radios outside of the United States.

20W Manpack Amplifier

AM1088-20
20W Add-on RF power amplifier for portable use. Attaches to PRC1088 and can be used in a man-portable or a mobile-portable application.

Crypto Management Systems

1088CD
Cloning device that allows one KF1088B to "fill" another KF1088B.

C992303
Interface cable between KF1088B and computer. Used when downloading fill data from computer to keyfill device. Included with CMS1088.

CMS1088
Crypto Management System includes application software that allows the system administrator to create hop plans and encryption keys for the PRC1088. Runs on a standard PC (486 processor or later with 16 MB memory under Windows95 or Windows98). Includes interface cable C992303 and a rugged laptop computer.

Note: To order only the application software, contact your Datron Representative.

KF1088
Standalone programming and keyfill device used to program and load ECCM and COMSEC fill information in the PRC1088 and PRC1080. Connection is made to the PRC1080 through a six-pin adapter (order separately). The KF1088 is completely programmable from the keyboard. Power for the KF1088 comes from internal lithium batteries (BR2/3A). The KF1088 includes a built-in test feature.

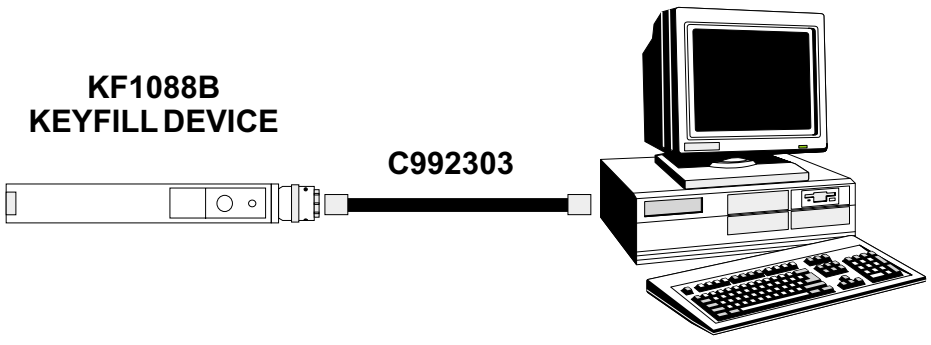

Downloading "fill" data into KF1088B.

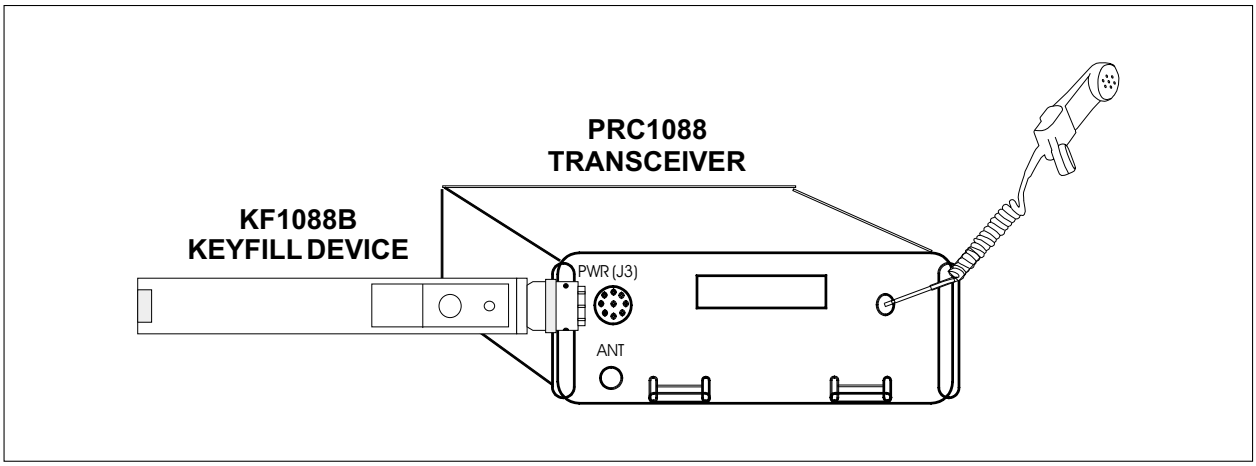

Using KF1088B to "fill" PRC1088.

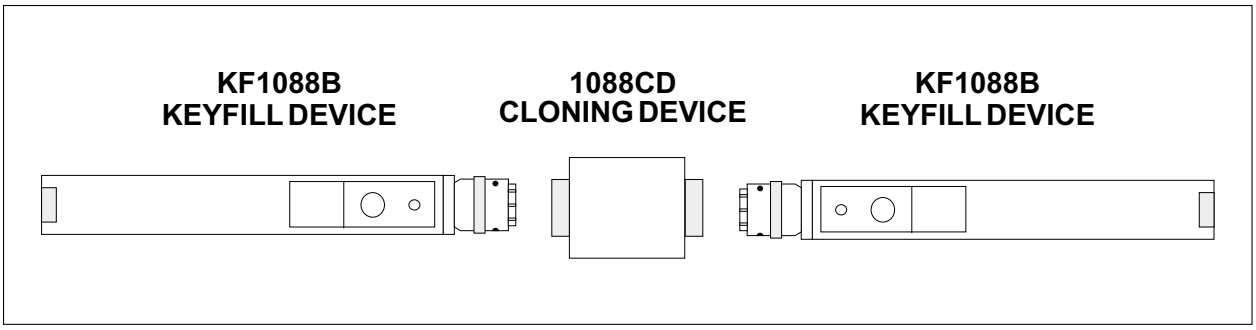

"Cloning" KF1088B keyfill devices.

KF1088B
"Dumb" fill device meant to be used with CMS1088 Crypto Management System. Designed to accept fill data from computer and download it to a PRC1088 or another KF1088B (using the 1088CD cloning device). Can also be use to fill the PRC1080 using the 1080ADPT.

Batteries for the PRC1088

BB-LA4.6
Sealed lead-calcium rechargeable battery (4.6 AH).

BB-LA6
Sealed lead-calcium rechargeable battery (6 AH).

BB-NC4
"D" size battery cassette for dry batteries or "D" size NiCad cells. Cassette only; does not include batteries.

BR-2/3A
Lithium battery, 3 Vdc memory for KF1088.

PRC-BCD-20
"D" size battery cassette and extended box for 20 cells. Cassette only; does not include batteries.

SDX-GO6/13
Lithium battery, 3 Vdc memory for PRC1088.

Battery Chargers/Power Supplies for the PRC1088

PRC-BC4
Multiple battery charger. 115/230 VAC, 24 Vdc input power. Charges up to four BB-series lead-calcium battery packs simultaneously. Automatic rapid/taper charge characteristic. Individual charge status indicators. Includes three C991610 charging cables and C991609 dc power cable. Specify ac voltage when ordering.

PRC-HC-30
Hand-crank generator, 30W. For recharging 12 Vdc battery packs such as BB-LA4.6. Double handle. Use monopod or tree mount. Complete with C991611 adapter cable for charging battery already installed in radio. Order C991618 cable to charge stand-alone battery.

PRC-HC-MP
Monopod mount. For 8 or 30W hand-crank generators. Unfolds to convenient operating height.

PRC-HC-TM
Tree mount. For 8 or 30W hand-crank generators. Includes tree strap.

PRC-PS
Power supply/battery charger for sealed lead-calcium battery pack. Will operate radio while charging the battery in the radio and a second battery simultaneously. Automatic rapid/taper charge characteristic. 115/230 VAC or 24 Vdc input. Includes C991608 control cable and C991609 dc power cable. Specify ac voltage when ordering.

PRC-SPU-10
Lightweight, fold-up, 10W solar panel. For recharging 12 Vdc battery packs such as BB-LA4.6. Complete with C991613 adapter cable for charging battery already installed in radio. Order C991617 cable to charge stand-alone battery.

Later in this section are diagrams of different charging accessories with the appropriate adapter cable.

Charging Cables for the PRC1088

C991608
Power/control cable, PRC-PS to radio.

C991609
PRC-PS input dc power cable.

C991610
Power cable, PRC-BC4 to BB-LA6 or BB-LA4.6.

C991611
HC-to-radio adapter cable.

C991613
SP-to-radio adapter cable.

C991617
SP-to-battery adapter cable.

C991618
HC-to-battery adapter cable.

Carrying Accessories for the PRC1088

LC-2
Tubular, lightweight, backpack carrying frame for manpack operation.

Audio Accessories for the PRC1088

All PRC1088 audio accessories are terminated with 5-pin, twist-lock, military-style connectors. They are interchangeable between Datron military products.

H-140/U
H-140/U ruggedized headphones with 5-pin connector.

H-250/U
Noise canceling, non-repairable version of MHS.

Note: The H-250/U requires a U.S. State Department license for export.

H3M
Handset-boom microphone. Single earphone low profile. Will fit under GI Kevlar helmet with clip-on push-to-talk switch.

MHS (H-189/U)
H-189/U military-style handset, repairable.

Manpack and Long-Range Antennas for the PRC1088

AT271MM
2m (6.6 ft.) folding whip antenna for extended range. Includes AB-591/U flexible antenna base (includes broadband (30-87.975 MHz) adapter).

AT892BB
1.2m (3.9 ft.) flexible-tape whip antenna (includes broadband (30-87.975 MHz) adapter).

OE-254/GRC
Broadband (30-87.975 MHz) portable omnidirectional antenna kit with mast. Overall height approximately 13m (42 ft.). Provides range of 25 miles (40 km) to 36 miles (58 km) with transit bag.

Retransmission Equipment for the PRC1088

1088 RETRAN
Cable kit, retransmission. Used to interconnect two PRC1088 manpack radios for use as a retransmission station in applications over long range paths in rough terrain that cannot be spanned with a single line-of-sight link. (Not for use in vehicular systems.)

PRC1088 Manpack System

Item	Quantity Supplied	DWC P/N	Description
1	1	PRC1088	Transceiver, VHF FM, ECCM/COMSEC, 30-87.975 MHz.
2	1	AT271MM	Antenna, folding whip, with attached antenna matching unit (2m).
3	1	AT892BB	Antenna, whip, flexible, with attached antenna matching unit (1.2m).
4	2	LC-2	Tubular, lightweight, backpack carrying frame.
5	1	BB-LA4.6	Battery, rechargeable.
6	1	MHS	Handset, military style H-189/U-type.

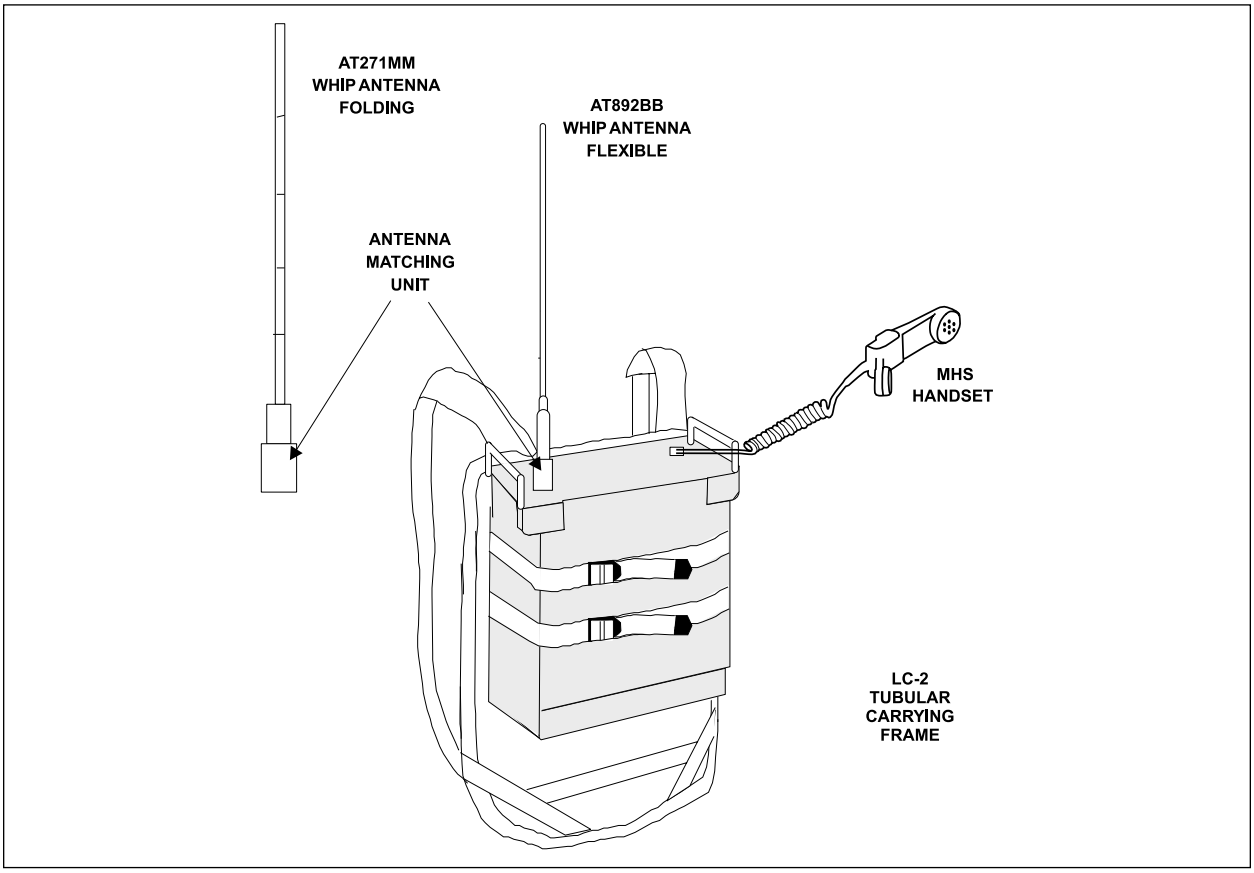

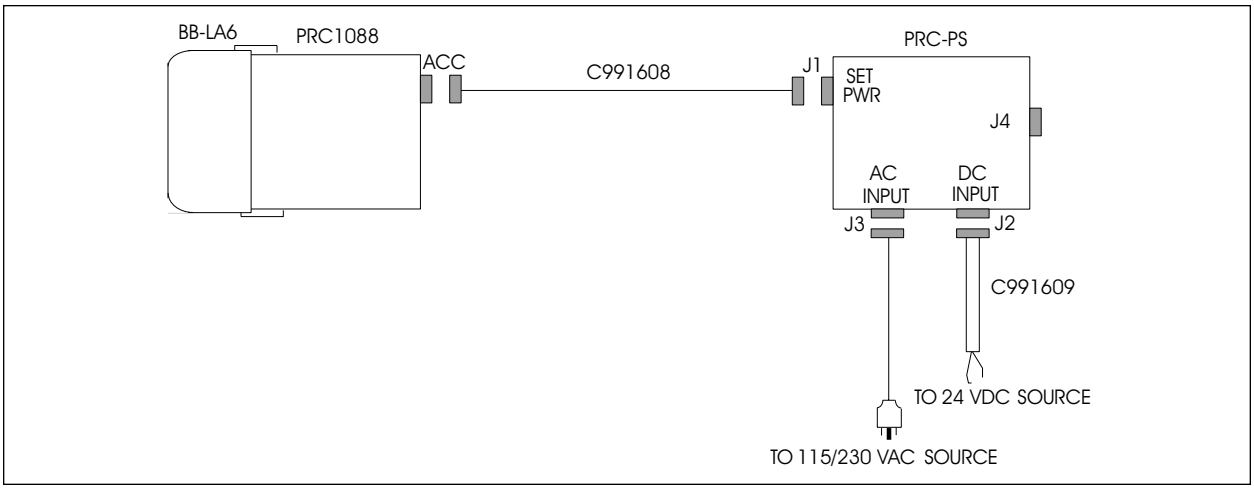

PRC-PS charging battery attached to PRC1088.

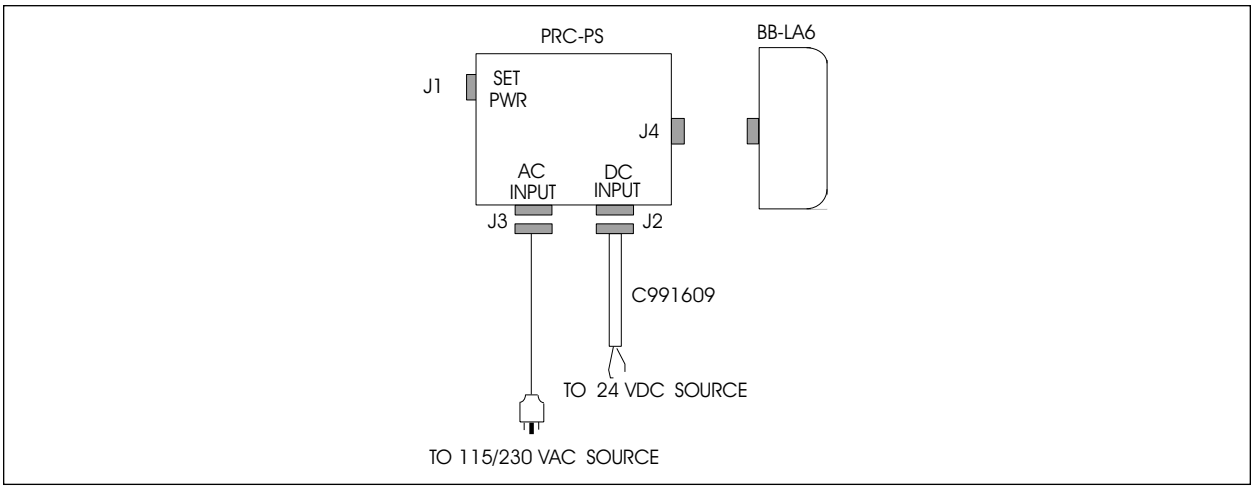

PRC-PS charging battery directly.

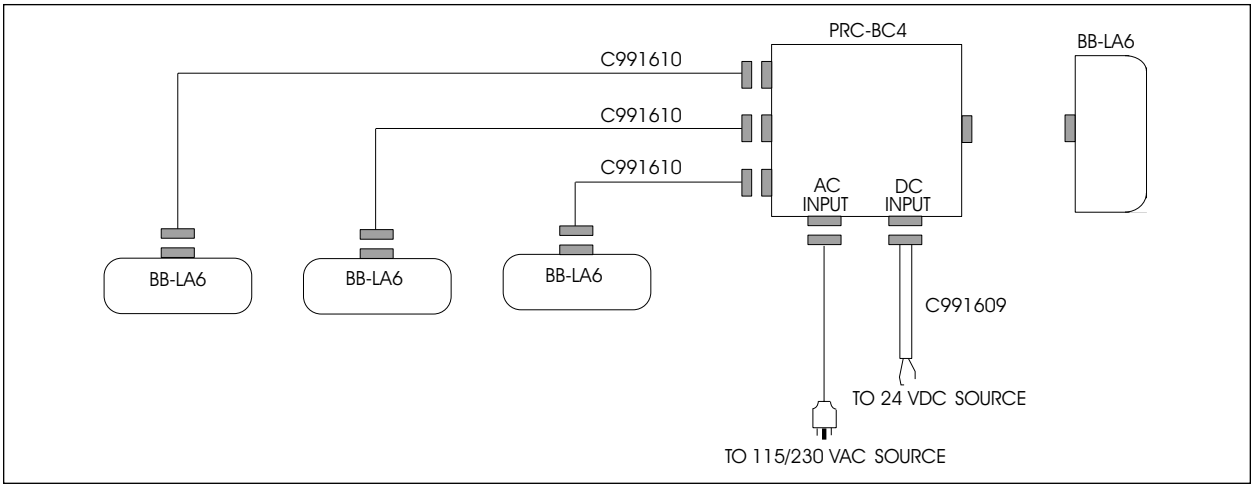

PRC-BC4 charging multiple batteries directly.

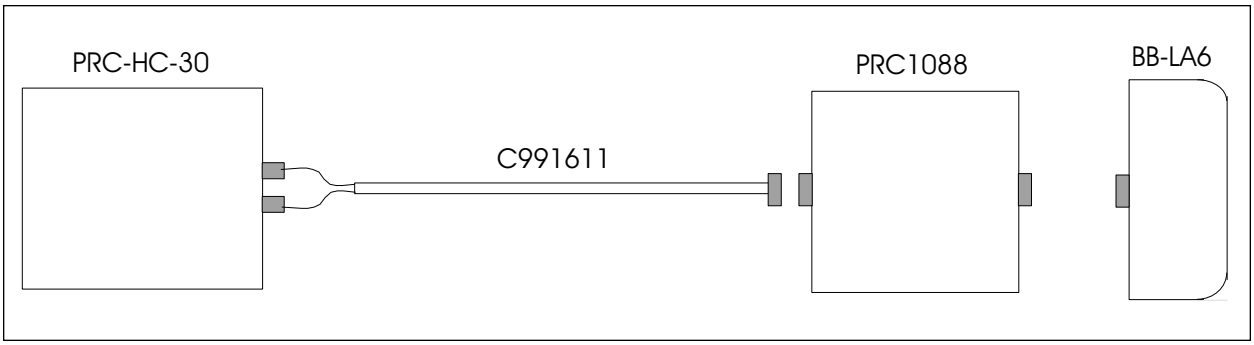

PRC-HC-30 charging battery attached to PRC1088.

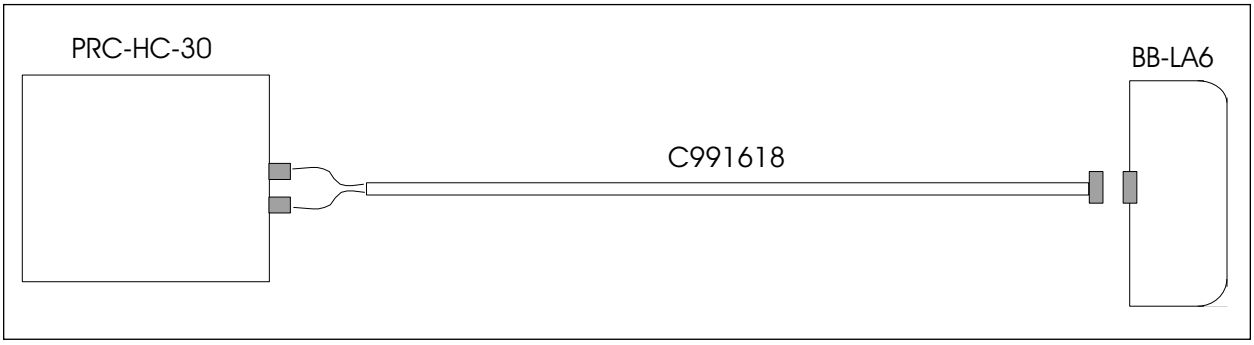

PRC-HC-30 charging battery directly.

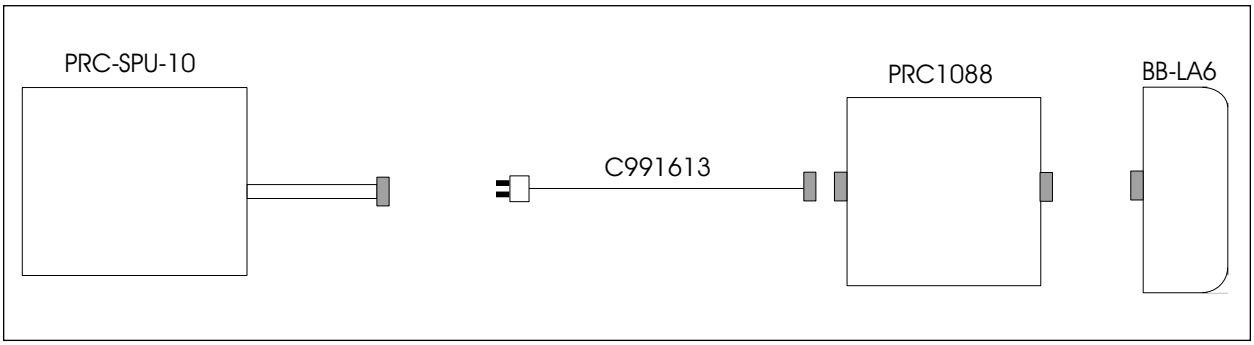

PRC-SPU-10 charging battery attached to PRC1088.

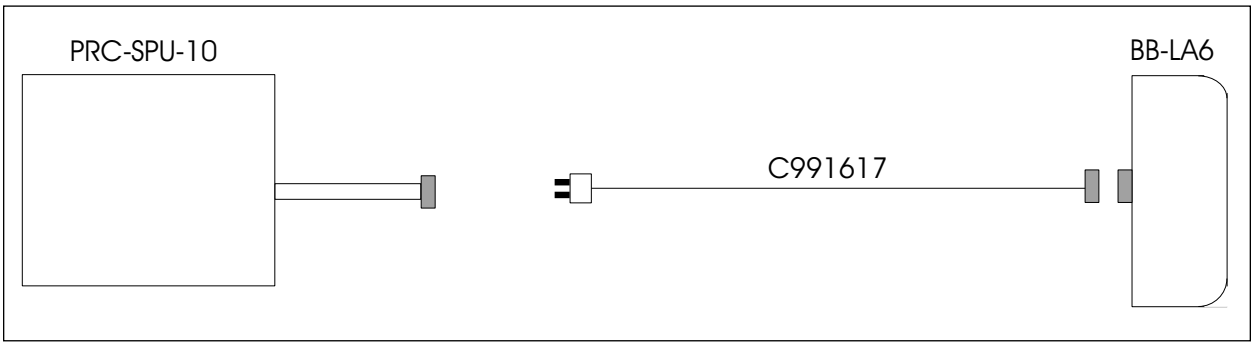

PRC-SPU-10 charging battery directly.

PRC1088 TACTICAL VHF FM VEHICULAR SYSTEMS

Both 5W and 50W PRC1088 vehicular systems are available. Both systems have full-band frequency hopping and digital encryption capability. Two systems are described in detail at the end of this section.

The standard vehicular radio configuration is designated the VRC1088. It includes the PRC1088 receiver/transmitter, the MT1088 vehicular adapter, the AM1088 50W power amplifier, and the MT-1029/VRC shock mount. The VRC1088 makes use of the standard 28 Vdc MT-1029/VRC shock mount and power interface common to the VRC-12 family of radios. It is fully interoperable with all U.S. standard audio accessories and the VIC 1 and 2 intercom systems.

Vehicular Adapters for the PRC1088

MT-1029/VRC

Standard military shock mount for vehicular mounting of manpack radios.

MT1088

20-30 Vdc vehicular adapter. Internal power conditioning provides power to the PRC1088. It interfaces with intercom and control functions through connection with MT-1029/VRC shock mount. Connects AM1088 power amplifier to PRC1088 for high-power (50W) operation.

Amplifier for the PRC1088

AM1088
30-87.975 MHz, broadband 50W power output amplifier for the PRC1088. Installs with MT1088 and PRC1088 into MT-1029/VRC for vehicular or base operation.

Vehicular Antennas for the PRC1088

4242-MK1
30-87.975 MHz broadband vehicular antenna, end fed, omnidirectional whip. Mounting base and feedline identical to AS-1729/VRC. No tuning control required. Should be used when good ground plane is available. Length 3.2 meter (10.5 ft). Order C991577 RF cable separately.

4242-MK2
Same as above except center fed. Should be used on towers or when poor grounding conditions exist since the antenna is ground independent.

Vehicular Audio Accessories for the PRC1088

LS-R
Loudspeaker, allows loudspeaker monitoring of PRC1088 radio.

Vehicular Power Accessories for the PRC1088

C991659
12V cable that allows charging of two BB-series batteries from a vehicle battery.

PRC-CA12V
12V power cable allows operation of radio from 12V source. Allows charging of lead-calcium battery pack on radio direct from 12V vehicle charging system. 12V systems only. No lithium or dry battery charging.

UPS100-28
115/230 VAC power supply for MT-1029 with VRC1088. Order C991614A power cable separately. Specify ac voltage when ordering.

Vehicular Retransmission Equipment for the PRC1088

C992159
Retransmission cable kit, which must be used anytime the PRC1088 radio is used with the MT1088 mount.

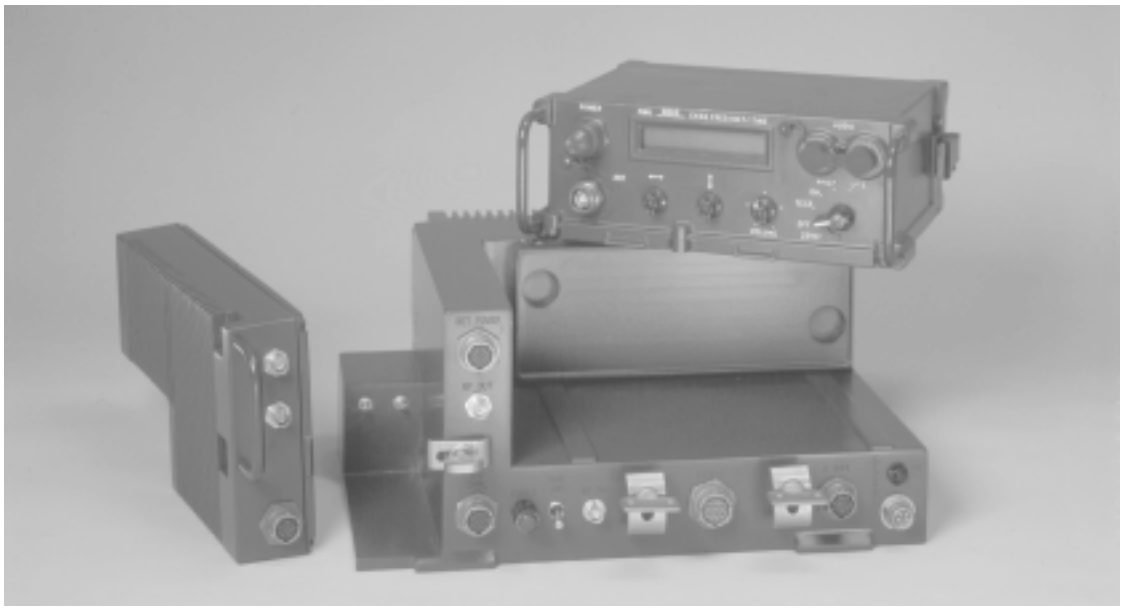

24 Vdc, 5W, Vehicular System

Item	Quantity Supplied	DWC P/N	Description
1	1	PRC1088	Transceiver, VHF FM, ECCM/COMSEC, 30-87.975 MHz.
2	1	4242-MK1	Antenna, vehicular, broadband.
3	1	MT1088	Adapter, Vehicle, 24 Vdc.
4	1	MT-1029/VRC	Mount, shock, electronic, U.S. mil. spec. equipped.
5	1	MHS	Handset, military style H-189/U-type.
6	1	C991575	PRC1088 to MT1088, RF cable.
7	1	C991577	MT1088 to 4242-MK1, antenna RF cable.
8	1	C991580	MT-1029/VRC to dc power cable.
9	1	C991949	PRC1088 to MT1088, control cable.

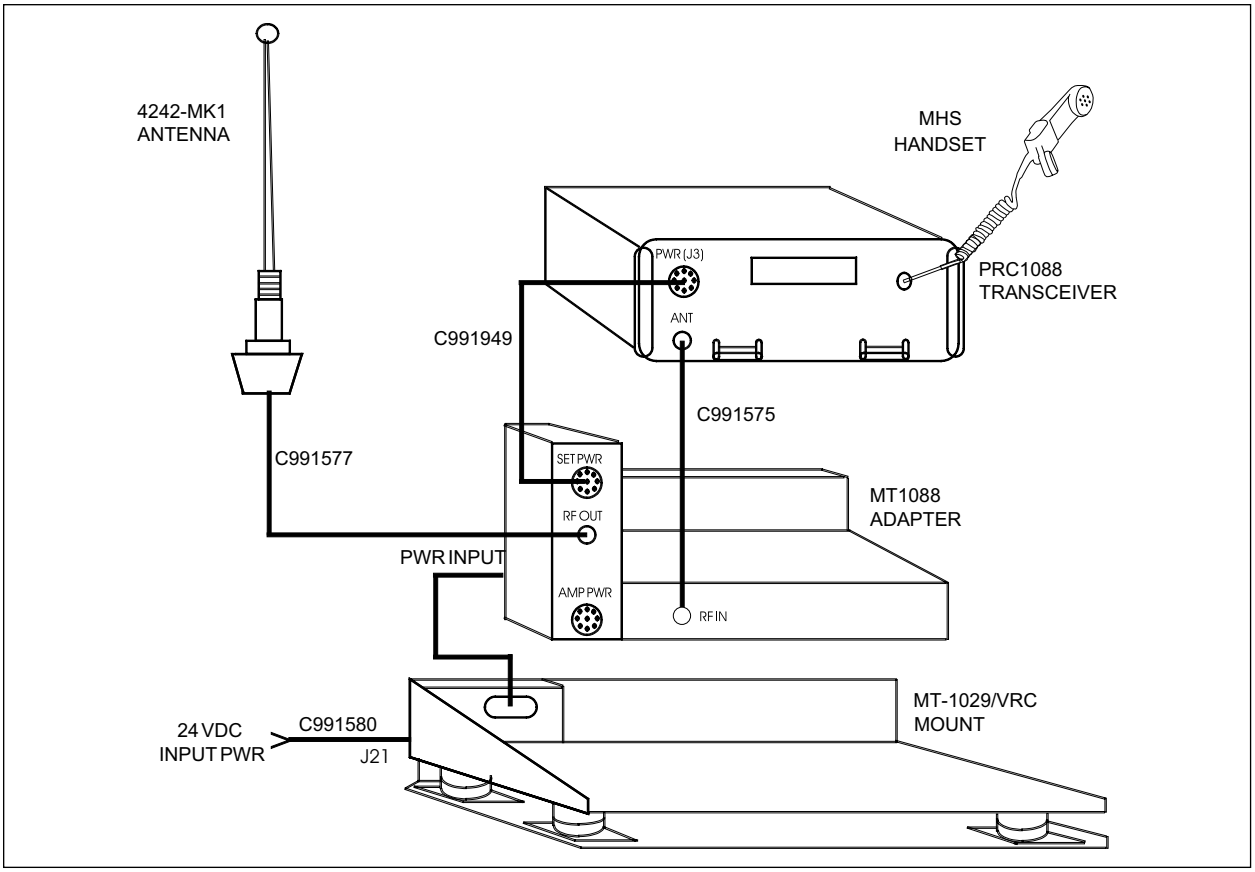

24 Vdc, 50W, Vehicular System

Item	Quantity Supplied	DWC P/N	Description
1	1	PRC1088	Transceiver, VHF FM, ECCM/COMSEC, 30-87.975 MHz.
2	1	AM1088	Power Amplifier, 50W.
3	1	4242-MK1	Antenna, vehicular, broadband.
4	1	MT1088	Adapter, Vehicle, 24 Vdc.
5	1	MT-1029/VRC	Mount, shock, electronic, U.S. mil. spec. equipped.
6	1	MHS	Handset, military style H-189/U-type.
7	2	C991575	PRC1088 to MT1088 and AM1088 to MT1088, RF cable.
8	1	C991577	AM1088 to 4242-MK1, antenna RF cable.
9	1	C991580	MT-1029/VRC to power cable.
10	2	C991949	PRC1088 to MT1088 and AM1088 to MT1088, RF control cable.

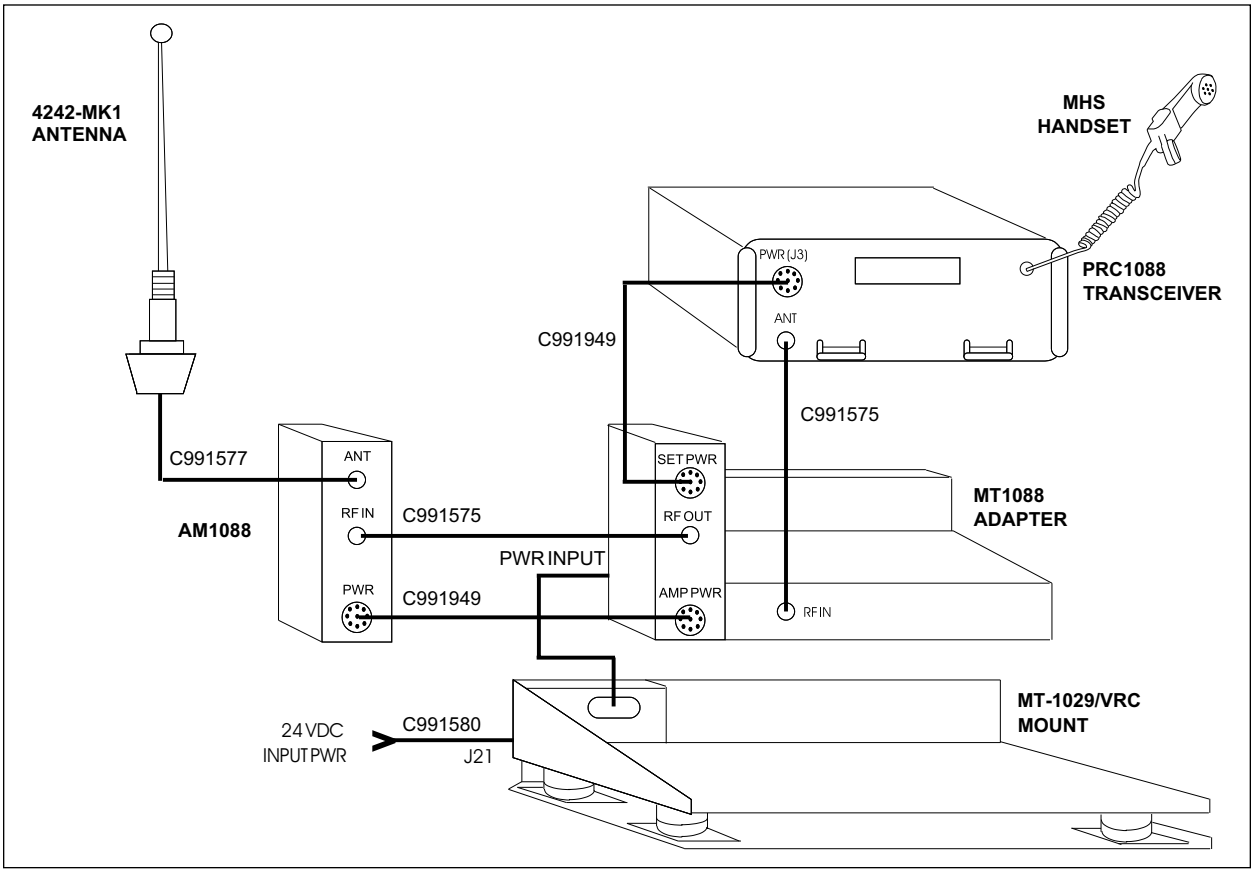

PRC1088 RADIO
CABLES, SPARES, AND MANUALS

Cables for the PRC1088

All cables come complete with connectors unless indicated otherwise.

DWC P/N	Description
C991575	PRC1088 to MT1088, RF, 0.2m.
C991577	BNC connectors, RF, 5m.
C991580	Open-ended, dc power, 3m.
C991609	PRC-PS and PRC-BC4, open-ended, dc power, 3m.
C991610	PRC-BC4 to BB-series, charging, 1m.
C991611	PRC-HC-series, charging, 2m.
C991612	BB-series, adapter, 0.3m.
C991613	PRC-SPU-10, power, 2m.
C991614	UPS100-series, power, 1m.
C991617	PRC-SPU-10, charging, 1m.
C991618	PRC-HC-30 to BB-LA6, charging, 1m.
C991949	Radio to mount, control/power, 0.3m.

Note: Standard length of each cable is indicated in cable description. To order nonstandard cable lengths, contact your Datron Representative.

Spares Kits for the PRC1088

DWC Product	Module Kit (MK)	Module Repair Kit (MRK)	Parts Spares Kit (PSK)
AM1088	✓	✓	✓
KF1088	✓		
MT1088	✓	✓	✓
PRC1088	✓	✓	✓
PRC-BC4	✓	✓	✓
PRC-PS	✓	✓	✓
UPS100-28			✓

Note: To order an individual spares kit, add the appropriate suffix (i.e., -MK, -MRK, -PSK) to the product part number. For a complete list of Module Kit, Module Repair Kit, and Parts Spares Kit, see the Spares section.

Spare Module Assemblies for the PRC1088

When ordering spare module assemblies specify module and serial number of equipment.

DWC P/N	Description
018-00100	Receiver Module, PRC1088
018-00200	Synthesizer Module, PRC1088
018-00300	PA Module, PRC1088
018-00400	Control Module, PRC1088
018-00600	Chassis Subassembly, PRC1088
018-00601	Display Module, PRC1088
018-00700	ECCM/COMSEC Module, PRC1088
021-00300	Battery PCB, KF1088
021-00400	Keyboard Assembly, KF1088
021-00700	Control Module, KF1088
025-00200	Main Module, MT1088
025-00300	Power Supply Module, MT1088
026-00200	Amplifier Module (50W), AM1088

Note: For information on spare subassemblies not listed, contact your Datron Representative.

Manuals for the PRC1088

DWC P/N	Operator (supplied with unit)	Technical (order separately)	Operator/Technical (supplied with unit)
AM1088-MS			✓
CMS1088-MS			✓
KF1088B-MS			✓
KF1088-MS			✓
MT1088-MS			✓
PRC1088-MS		✓	
PRC1088-MSOP	✓		
PRC-BC4-MS			✓
PRC-HC-MS			✓
PRC-PS-MS			✓
PRC-SPU-10-MS			✓
UPS100-28-MS			✓

Note: For a detailed list of Datron documentation, see the Manual section. For system documentation, contact your Datron Representative.

SPECTRE V® TACTICAL VHF TRANSCEIVERS

- 30.000-87.975 MHz
- 12.5 kHz and 25 kHz Channel Spacing
- Simplex/Semi-Duplex
- 100 Memory Channels
- MIL-STD-810 Compliant
- 500 mW to 75W Output Power
- Embedded Data and GPS
- Full-Band Frequency Hopping and Digital Encryption

Datron's Spectre V® series of tactical transceivers, covering tactical operations in the HF, VHF, and UHF frequency bands, is designed to satisfy the demanding needs of today's sophisticated communications marketplace. The Spectre V, a high performance, competitively priced, 30 to 87.975 MHz tactical manpack that features embedded ECCM, COMSEC, and GPS capabilities, is the initial offering in this new line of high performance products.

The Spectre V is a complete tactical VHF/FM system addressing today's most pressing battlefield issues by incorporating full internal data capability, allowing multiple units to be co-located on the same vehicle, and providing completely language independent operation. Manpack, mobile, and fixed station systems are available which ensure secure, tactical communications in the face of sophisticated electronic warfare (EW) threats. Using the latest available technology, Datron's new software-driven Spectre V communications systems enable a modern army to tackle the most complex problems that can be encountered on any battlefield.

This equipment available for the Spectre V is described in this section.

Spectre V Transceivers

PRC2100V

The PRC2100V is a tactical VHF/FM transceiver that transmits and receives both voice and data in the 30 to 87.975 MHz frequency band. It functions as both a manpack and the core of a number of mobile or fixed station systems. This transceiver includes embedded "V" and "V2" full-band frequency hopping and digital encryption options, and offers a user the major features listed below. The "V2" is Datron's proprietary hopping and encryption algorithm. It offers a faster hop rate and a higher sophistication, but is not interoperable with either the PRC1080 or the PRC1088. The PRC2100V radio is interoperable with both the PRC1080 and PRC1088 in hop and encryption modes when using the V algorithms. Both the 1088-type and the V2 algorithms can reside simultaneously in the PRC2100V2.

PRC2150

The PRC2150 is a fixed frequency, single-channel version of the Spectre V. It provides the same functionality as the PRC2100V, uses the same accessories, and has GPS and user language options. However, the PRC2150 cannot be upgraded to include either type of ECCM or COMSEC.

The PRC2150 is fully inter-operable with our PRC1077 and PRC1060 in all modes, and with the PRC1080 and PRC1088 in fixed-frequency mode.

Transceiver Features

- Both 25 kHz and 12.5 kHz channel spacing – double the available channels
- Up to 10W RF output power (manpack) and 75W (mobile)
- 100 preset memory channels completely configurable with all mode information
- Channel scanning of all presets
- Up to 10 channel groups for mission networking requirements
- High capacity battery technology for increased mission life
- A rugged (MIL-STD-810), low-signature (MIL-STD-461), manpack and vehicular system
- 300 to 57,600 bit/sec automatic input data processing capability with forward error correction algorithms
- The ability to co-locate transceivers side-by-side on the same vehicle
- Accurate position and time information using embedded 12-channel GPS option
- A sophisticated, yet easy to operate, menu-driven user interface in the language of the user; five languages are standard: English, Spanish, Portuguese, French, and Arabic (others languages are optional)
- Automatic BITE and self-calibration routines to facilitate troubleshooting and maintenance
- Complete fault log with identification and time of all failures

Internal Options for the Spectre V

2100GPS

Available as standard on the PRC2100V and as an option on the PRC2150. Includes an embedded 12-channel GPS receiver and an external antenna that plugs into a connector on the front of the radio. This option allows position location and universal time information to be displayed in a separate menu screen on the radio's front panel display. The primary communications channel can also be monitored from the GPS screen. No special programming has to be done to incorporate the 2100GPS option in the field.

Optional Languages

Available on both the PRC2100V and the PRC2150. The radio can be programmed to operate in almost any language. All menu screens display information in the chosen language of the equipment user. The radio comes standard with a five language package consisting of English, Spanish, Portuguese, French, and Arabic. Other languages are optional.

2100ECCM

The PRC2100V can contain full-band frequency hopping using one or both of two distinct algorithms. These frequency-hopping options are software upgrades to the standard PRC2100V and take the following forms:

- **V-Type ECCM**: Radios containing this frequency-hopping algorithm are interoperable with Datron's PRC1080 and PRC1088 in their hopping modes.
- **V2-Type ECCM**: This is a frequency-hopping algorithm proprietary to the PRC2100V and features hop rates comparable with the highest available in the industry. Radios containing this frequency hopping algorithm are not interoperable with Datron's PRC1080 and PRC1088 in their hopping modes.
- **V/V2-Type ECCM**: Both the V-type and the V2-type hopping algorithms can exist simultaneously in the same PRC2100V. This allows setting up unique network groups for interoperability with either PRC1080, PRC1088, or other PRC2100V radios.

2100ENCR

The PRC2100V can contain digital encryption using one or both of two distinct algorithms. These encryption options are software upgrades to the standard PRC2100V and take the following forms:

- **V-Type ENCR**: Radios containing this encryption algorithm are interoperable with Datron's PRC1080 and PRC1088 in their encryption modes.
- **V2-Type ENCR**: This is an encryption algorithm proprietary to the PRC2100V and features a very high-level of communications security. Radios containing this algorithm are not interoperable with Datron's PRC1080 and PRC1088 in their encryption modes.
- **V/V2-Type ENCR**: Both the V-type and the V2-type encryption algorithms can exist simultaneously in the same PRC2100V. This allows setting up unique network groups for interoperability with either PRC1080, PRC1088, or other PRC2100V radios.

Power Source Accessories for the Spectre V

BB-NM10
An 11.1 AH NiMH battery pack that attaches directly to the rear of the Spectre V. It is the primary power source for the transceiver when used in the portable (manpack) mode. This is a rechargeable battery pack capable of over 500 charge/discharge cycles when used according to the recommended procedures.

BC-NM-1
A charger for the BB-NM10 battery pack. Works off input ac or +28 Vdc power. Designed to charge a single BB-NM10 in under 6 hours. The battery pack connects directly to the charger. Rugged and immersible – designed for tactical use. Order C992196 dc power cable separately. Order either C992034 (115 VAC) or C992139 (230 VAC) separately.

BC-NM-3
A three- unit charger for the BB-NM10 battery pack. Works off input ac power. Designed to charge three BB-NM10 batteries in under 6 hours. Designed for depot use.

Tactical Antennas for the Spectre V

AT-892/U
1.2m (3.9 ft.) flexible-tape whip antenna. Collapsible antenna with gooseneck base. Attaches directly to the whip antenna mount on the radio and uses radio internal matching network. Can be used with any radio mode of operation.

AT271V
Modified version of AT-271A/U manpack whip antenna. Approximately 2m (6.6 ft.) in length. Attaches directly to the whip antenna mount on the radio and uses radio internal matching network. Should provide longer range communications than the 3 ft. blade. Can be used with any radio mode of operation.

OE-254/GRC
Broadband (30-87.975 MHz) portable, omnidirectional antenna kit with mast. Overall height is approximately 13m (42 ft.). Comes with transit bag. Designed for long distance VHF communications.

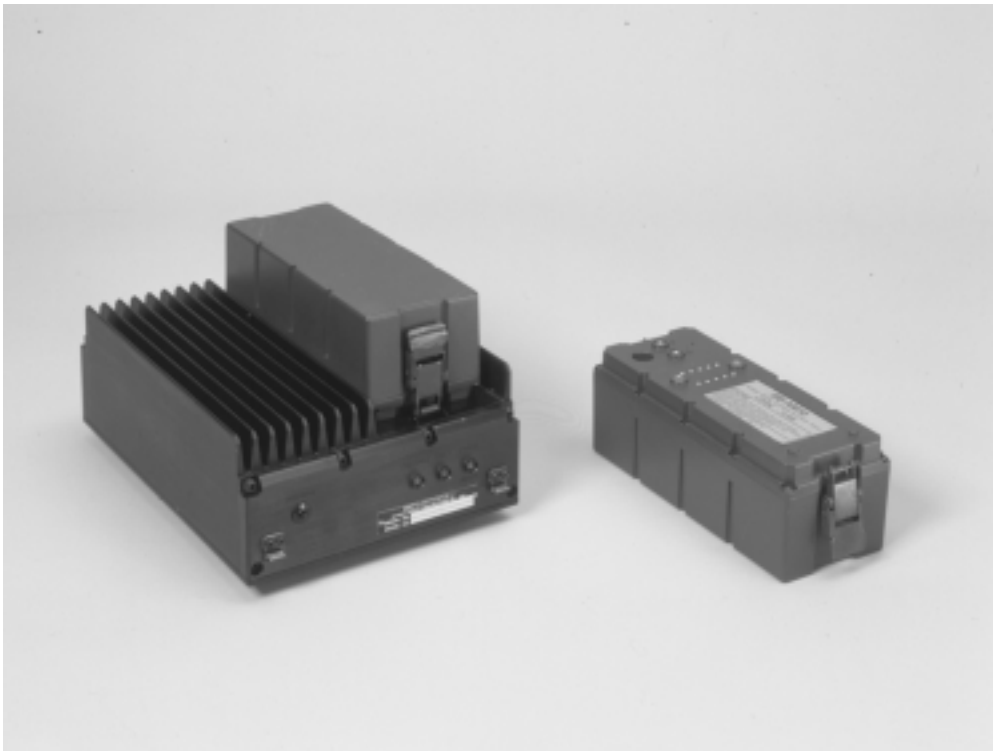

Audio Accessories for the Spectre V

All Spectre V audio accessories are terminated with 5-pin, twist-lock, military-style connectors. They are interchangeable between Datron products.

H-140/U
Ruggedized headphones with 5-pin connector.

H-250/U
Noise canceling, non-repairable version of the MHS.

H2100
Ruggedized headphone, lightweight, waterproof, single-earpiece, waterproof PTT switch, and clothing clip. Fits under helmet.

H3M
Headset-boom microphone. Single earphone, low profile. Fits underneath GI Kevlar helmet with clip-on push-to-talk switch.

MHS (H-189/U)
H-189/U military-style handset. Repairable.

Retransmission Equipment for the Spectre V

C992191
Cable for retransmission use. Used to interconnect a pair of Spectre V transceivers as a retransmission station. Applications involve communications over long range paths in rough terrain that cannot be spanned with a single line-of-sight link.

Carrying Accessories for the Spectre V

LC-2
Tubular, lightweight backpack carrying frame for manpack operation.

Data Accessories for the Spectre V

Both the PRC2100V and the PRC2150 can send and receive data messages using a standard computer terminal. Cable C992304 is used to connect the computer (serial COM port RS232) to the radio's accessory connector. User-friendly data communication software is available for loading into the computer. For details, contact your Datron Representative.

C992304
Data transmission accessory cable for use with the Spectre V and a computer. Use to access RS232 port for transmission of data.

ECCM and COMSEC Accessories for the Spectre V

CMS2100
Crypto Management System. A complete frequency and key management system that includes a Windows-based software program that a system administrator uses to create hop plans and encryption keys (fill data). It has programs for both the V-type and V2-type algorithms. In addition to the software program, the complete system includes a dedicated laptop, KF2100 Keyfill Device, and C992208 interface cable assembly.

KF2100
Small handheld keyfill device, takes fill data from the CMS2100 computer and downloads the data into the transceiver or another KF2100 for cloning purposes.

2100CD
A small, handheld device used to clone one keyfill from another.

C992208
A short, interface cable assembly used to download fill data from the CMS computer to the KF2100 Keyfill Device.

C992304
Used to download fill data directly from the CMS computer to the transceiver.

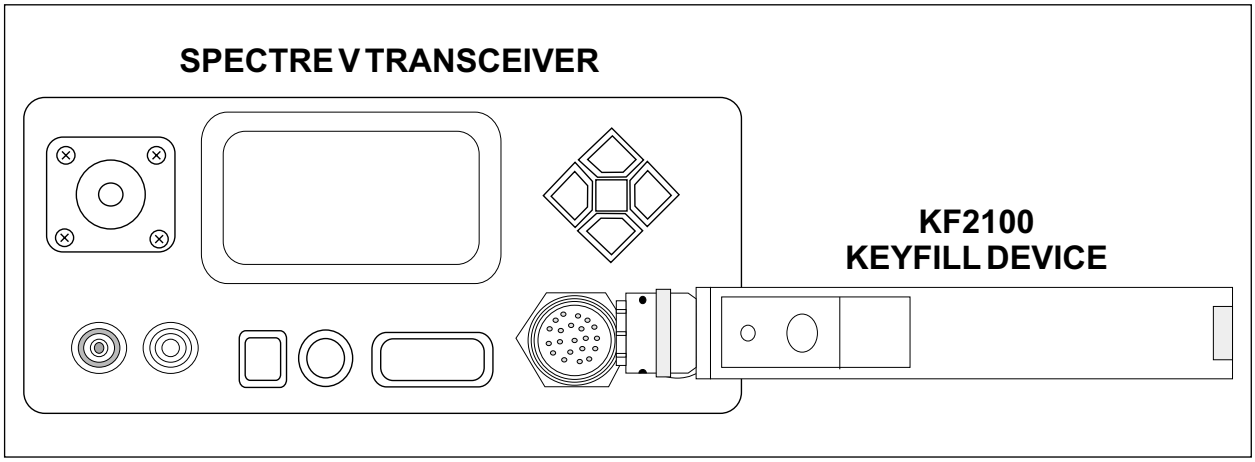

Using KF2100 to Fill the Transceiver with Data

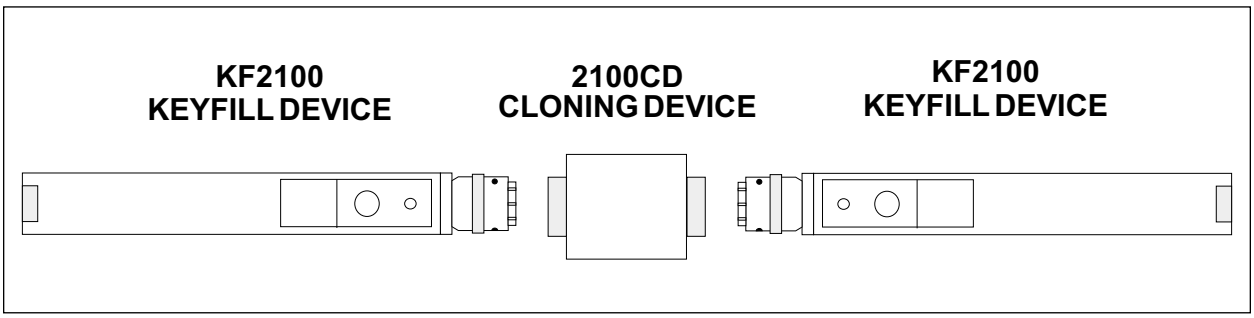

Cloning Device for the KF2100

Spectre V Manpack System

Item	Quantity Supplied	DWC P/N	Description
1	1	PRC2100V	Transceiver, VHF FM, 30-87.975 MHz.
2	1	AT-892/U	Antenna, whip, flexible, 1.2m (3.9 ft.).
3	1	BB-NM10	11.1 AH NiMH battery pack, rechargeable.
4	1	AT271V	Antenna, whip, folding, 2m (6.6 ft.).
5	1	LC-2	Tubular, lightweight, backpack carrying frame.
6	1	MHS	Handset, military style H-189/U-type.

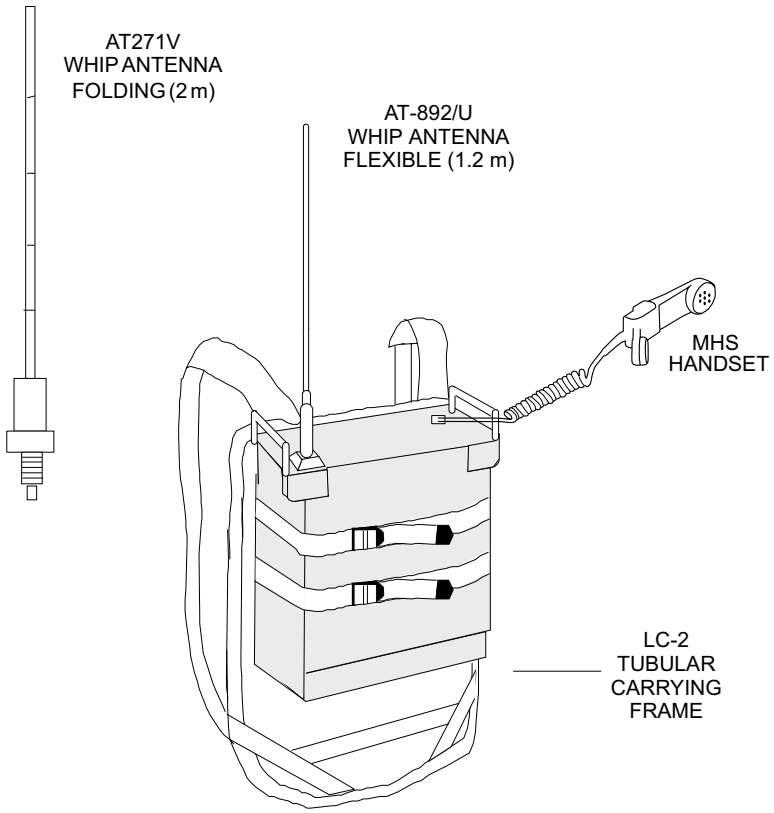

VEHICULAR CONFIGURATIONS FOR THE SPECTRE V TRANSCEIVERS

- RF Output from 0.5-75W
- Single and Dual Systems
- Waterproof to 1 meter
- "Jerk-and-Run" Mounting
- Compact, Space Saving Design
- Co-site Applications

While the basic Spectre V is a manpack radio, it is designed to work equally well in a vehicular or fixed station application. The compact mechanical design of the product lends itself particularly well to configurations where space is at a premium. The rugged mobile mount is capable of hosting up to two Spectre transceivers and an RF Booster Amplifier in a single stack-mount configuration. All mobile or fixed installations are powered from +28 Vdc, provide power conditioning for the raw input, and contain converter circuitry to create the +12 Vdc input for the transceiver. They are designed to be flexible "jerk-and-run" configurations. The transceiver(s) can be quickly and easily removed from the mount without affecting the installation, a battery attached, and ready to use as a manpack at a moment's notice.

All versions of the transceiver work equally well in any of the vehicular or fixed installations described in the following section.

Vehicular System Adapters for the Spectre V

MT2100
A power conditioning/routing box that sits on top of the MT2100MM and holds the Spectre V. The box runs off of +28 Vdc, provides power conditioning for the +28 Vdc input to the amplifier, and contains converter circuitry to create the +12 Vdc input for the transceiver. One MT2100 is required for each radio in the configuration. Includes C992174 radio control cable.

MT2100DC-OUT
Heavy-duty dc output option. Adds dc output connector to the MT2100 when two transceivers are used in a dual-stack configuration. Allows primary power cabling from one MT2100 to the second.

MT2100MM
A vehicular shock tray that can hold up to two Spectre V transceivers and an RF booster amplifier in a single stack-mount configuration. The amplifier can be mounted on the top or either side of the stack, depending on physical configuration constraints.

MT2100-MNTKIT
Mounting brackets needed when two transceivers are used in a dual-stack configuration. Added to the top of MT2100MM.

MT2100VIC
Connector and internal circuitry added to MT2100 to allow use of PRC2100V in a VIC1 or VIC 2 intercom system.

Vehicular Amplifier for the Spectre V

AM2100
A 75W RF booster amplifier for the Spectre V. Runs off of +28 Vdc and works with any model of the transceiver. The amplifier is functional in all transceiver modes, including full-band hopping and encryption. It also contains a bypass mode to allow low-power operation when mission requirements dictate.

AM2100-MNTKIT
Mounting brackets needed when AM2100 is included in the vehicular stack. Must be attached to the MT2100MM in the location where the AM2100 is attached.

Vehicular Antennas for the Spectre V

4242-MK1
30-87.975 MHz broadband vehicular end-fed whip antenna. Omnidirectional, no tuning required. Should be used with good ground plane. Length is 3.2m (10.5 ft.). Order C992195 or C992173 separately.

4242-MK2
30-87.975 MHz broadband vehicular center-fed whip antenna. Omnidirectional, no tuning required. Should be used on towers or where poor grounding conditions exist since antenna is ground-independent. Length is 3.2m (10.5 ft.). Order C992195 or C992173 separately.

Vehicular Audio Accessories for the Spectre V

LS-R
Loudspeaker. Allows speaker monitoring of Spectre V radio communications.

Vehicular Power Accessories for the Spectre V

UPS100-28
115/230 VAC power supply for use with the Spectre V vehicular systems. Order C991614 power cable separately. Specify ac voltage when ordering.

Vehicular Systems for the Spectre V

The systems shown on the following pages represent generic mobile or fixed station configurations. Both the PRC2100V and the PRC2150 can be interchanged in any configuration. For detailed information on other desired applications, contact your Datron Representative.

Low-Power System

A single Spectre V transceiver contained in a single mount. Up to 10W RF power output.

System includes:

- Spectre V Transceiver
- MT2100 Power Conditioner
- MT2100MM Mount
- Interconnecting Cables

Dual Low-Power System

Two Spectre V transceivers stacked in a single mount. Allows for simultaneous transmission and reception on the same vehicle. Up to 10W power output.

System includes:

- Spectre V Transceivers (2)
- MT2100 Power Conditioner (2)
- MT2100MM Mount
- MT2100-MNTKIT Mounting Kit
- Interconnecting Cables

High-Power System

A single Spectre V transceiver and one AM2100 RF Booster Amplifier stacked in a single mount. Up to 75W RF power output.

System includes:

- Spectre V Transceiver
- MT2100 Power Conditioner
- MT2100MM Mount
- AM2100 RF Booster Amplifier
- AM2100-MNTKIT Mounting Kit
- Interconnecting Cables

Dual High-Power System

Two Spectre V transceivers and one AM2100 RF Booster Amplifier stacked in a single mount. Allows for simultaneous transmission and reception on the same vehicle. Up to 75W power output.

System includes:

- Spectre V Transceivers (2)
- MT2100 Power Conditioner (2)
- MT2100MM Mount
- MT2100-MNTKIT Mounting Kit
- AM2100 RF Booster Amplifier
- AM2100-MNTKIT Mounting Kit
- Interconnecting Cables

Low-Power Mobile System

Item	Quantity Supplied	DWC P/N	Description
1	1	PRC2100V	Transceiver, VHF FM, 30-87.975 MHz.
2	1	MT2100	Mobile power adapter, includes C992174 control cable.
3	1	MT2100MM	Mobile mounting tray.
4	1	4242-MK1	Antenna, broadband, vehicular.
5	1	MHS	Handset, military style H-189/U-type.
6	1	C991580	MT2100 to power supply, open-ended dc power cable.
7	1	C992195	PRC2100V to antenna, RF cable.
Fixed Station Option			
Add:	1	UPS100-28	Power supply, 115/230 VAC.
	1	C991614	UPS100-28 to power supply, dc power cable.
Delete:	1	C991580	MT2100 to power supply, open-ended dc power cable.

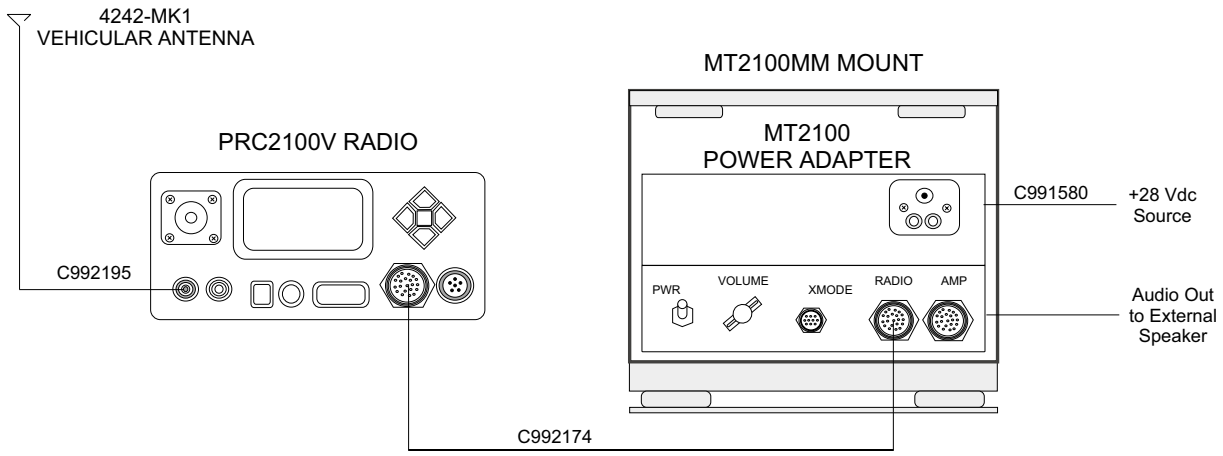

Dual Low-Power Mobile System

Item	Quantity Supplied	DWC P/N	Description
1	2	PRC2100V	Transceiver, VHF FM, 30-87.975 MHz.
2	2	MT2100	Mobile power adapter, includes C992174 control cable.
3	1	MT2100MM	Mobile mounting tray.
4	1	MT2100-MNTKIT	Dual-stack mount brackets.
5	2	4242-MK1	Antenna, broadband, vehicular.
6	1	MT2100DC-OUT	Heavy-duty dc output option.
7	2	MHS	Handset, military style H-189/U-type.
8	1	C991580	MT2100 to power supply, open-ended dc power cable.
9	1	C992173	Auxiliary power cable.
10	2	C992195	PRC2100V to antenna, RF cable.
Fixed Station Option			
Add:	1	UPS100-28	Power supply, 115/230 VAC.
	1	C991614	UPS100-28 to power supply, dc power cable.
Delete:	1	C991580	MT2100 to power supply, open-ended dc power cable.

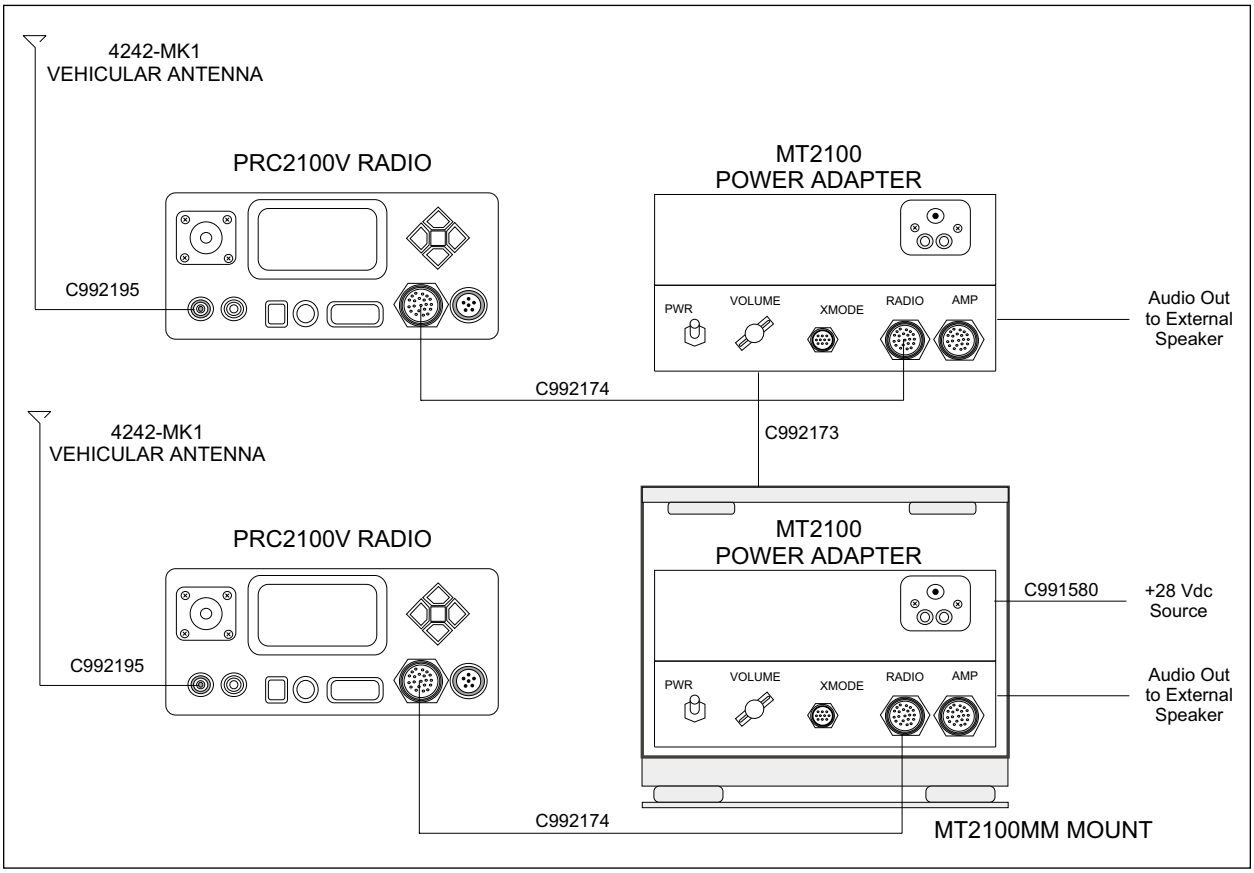

High-Power Mobile System

Item	Quantity Supplied	DWC P/N	Description
1	1	PRC2100V	Transceiver, VHF FM, 30-87.975 MHz.
2	1	AM2100	RF Booster Amplifier, 75W.
3	1	AM2100-MNTKIT	AM2100 mounting brackets.
4	1	MT2100	Mobile power adapter, includes C992174 control cable.
5	1	MT2100MM	Mobile mounting tray.
6	1	4242-MK1	Antenna, broadband, vehicular.
7	1	MHS	Handset, military style H-189/U-type.
8	1	C991580	MT2100 to power supply, open-ended dc power cable.
9	1	C992172	PRC2100V to AM2100, RF cable.
10	1	C992175	AM2100 to 4242-MK1, RF cable.
11	1	C992176	AM2100 to MT2100, power cable.
12	1	C992177	AM2100 to MT2100, control cable.
Fixed Station Option			
Add:	1	UPS100-28	Power supply, 115/230 VAC.
	1	C991614	UPS100-28 to power supply, dc power cable.
Delete:	1	C991580	MT2100 to power supply, open-ended dc power cable.

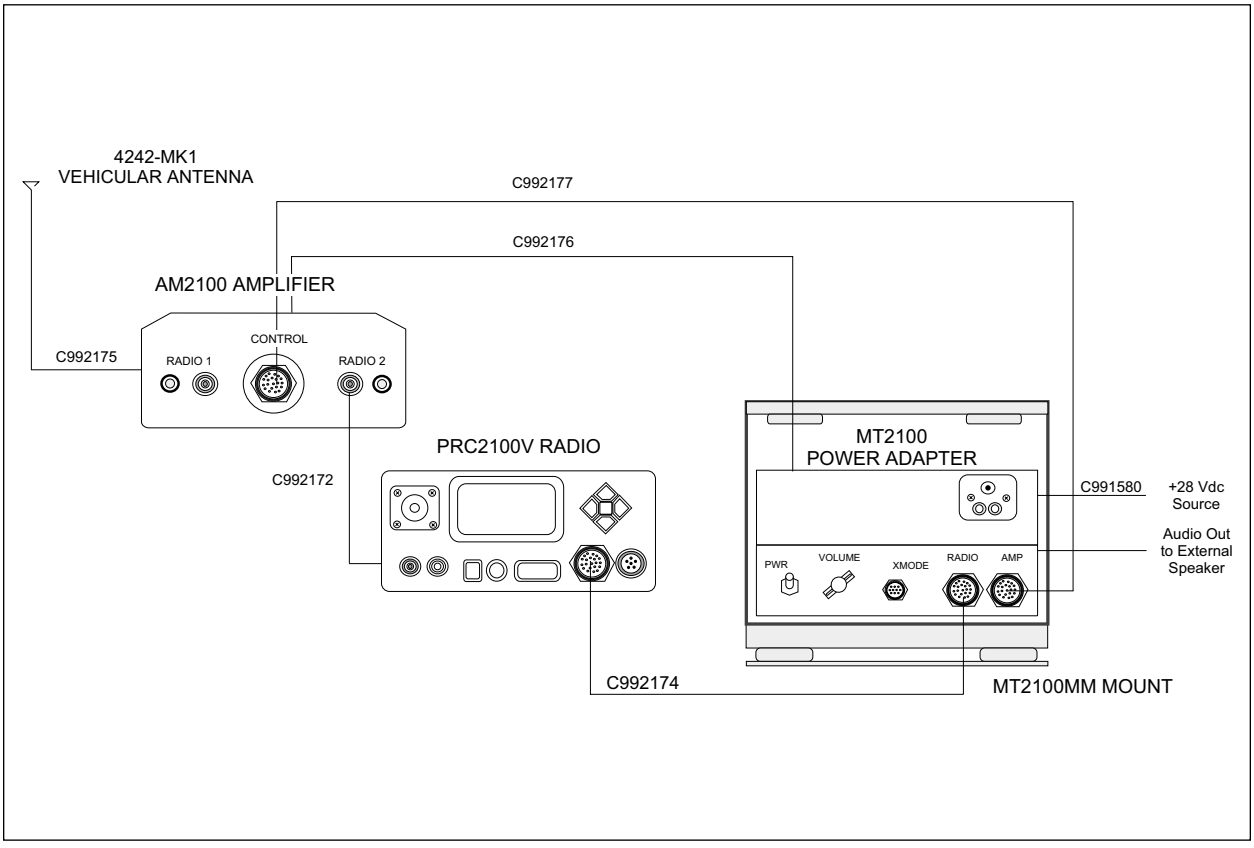

Dual High-Power Mobile System

Item	Quantity Supplied	DWC P/N	Description
1	2	PRC2100V	Transceiver, VHF FM, 30-87.975 MHz.
2	1	AM2100	RF Booster Amplifier, 75W.
3	1	AM2100-MNTKIT	AM2100 mounting brackets.
4	2	MT2100	Mobile power adapter, includes C992174 control cable.
5	1	MT2100MM	Mobile mounting tray.
6	1	MT2100-MNTKIT	Dual-stack mount brackets.
7	1	4242-MK1	Antenna, broadband, vehicular.
8	1	MT2100DC-OUT	Heavy-duty dc output option.
9	1	MHS	Handset, military style H-189/U-type.
10	1	C991580	MT2100 to power supply, open-ended dc power cable.
11	1	C992172	PRC2100V to AM2100, RF cable.
12	1	C992173	Auxiliary power cable.
13	2	C992175	AM2100 to 4242-MK1, RF cable.
14	1	C992176	AM2100 to MT2100, power cable.
15	1	C992199	AM2100 to two MT2100s, Y-cable, control cable.
16	1	C992195	PRC2100V to antenna, RF cable.
Fixed Station Option			
Add:	1	UPS100-28	Power supply, 115/230 VAC.
	1	C991614	UPS100-28 to power supply, dc power cable.
Delete:	1	C991580	MT2100 to power supply, open-ended dc power cable.

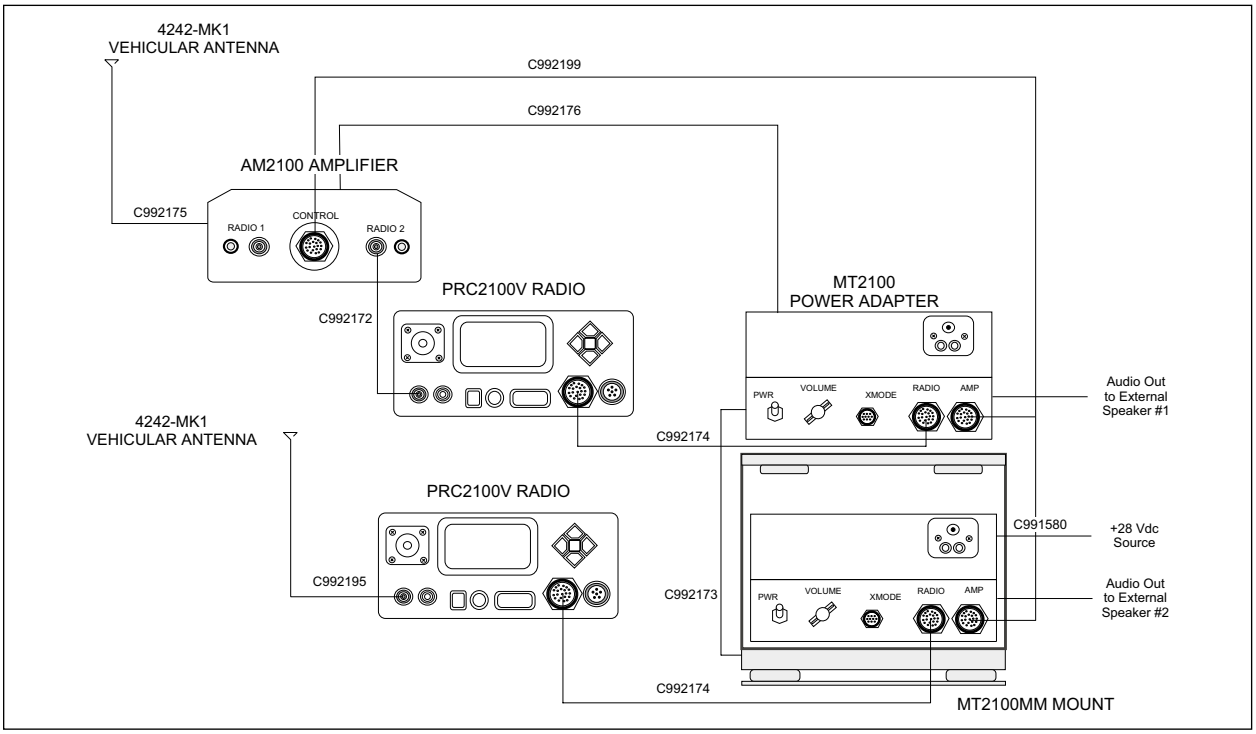

SPECTRE V RADIO
CABLES, SPARES, AND MANUALS

Cables for the Spectre V

All cables come complete with connectors unless indicated otherwise.

DWC P/N	Description
C991580	Open-ended, dc power, 3m.
C991614	UPS100-series, power, 1m.
C992034	AC power with standard 115V plug, 1.8m.
C992139	AC power with standard 230V plug, 1.8m.
C992172	PRC2100V to AM2100, RF, 0.3m.
C992173	MT2100 to MT2100, auxiliary power, 0.5m.
C992174	PRC2100V, control, 0.3m.
C992175	AM2100 to antenna, RF.
C992176	AM2100 to MT2100, power, 0.3m.
C992177	AM2100 to MT2100, control, 0.5m.
C992195	PRC2100V to antenna, RF, 4.95m.
C992196	BC-NM-1, dc power, 3.3m.
C992199	AM2100 to two MT2100s, Y-cable, control cable, 3m.
C992208	KF2100 to computer, DB9F, 2m.
C992304	Data transmission, 2m.

Spares Kits for the Spectre V

DWC Product	Module Kit (MK)	Module Repair Kit (MRK)	Parts Spares Kit (PSK)
AM2100	✓	✓	✓
BC-NM-1	✓	✓	✓
KF2100	✓		
MT2100	✓	✓	✓
MT2100MM			✓
PRC2100V	✓		✓
UPS100-28			✓

Spare Module Assemblies for the Spectre V

When ordering spare module assemblies specify module and serial number of equipment.

DWC P/N	Description
097-10000	Front Panel Assembly, PRC2100V
097-20100	Analog Interface PCA, PRC2100V
097-20200	µProcessor PCA, PRC2100V
097-20300	Feature PCA, PRC2100V
097-20401	LPF, Digital, PCA, PRC2100V
097-20402	LPF, RF, PCA, PRC2100V
097-20800	Power Amplifier Assembly, PRC2100V
097-20900	Rx Converter PCA, PRC2100V
097-21000	IF Demodulation PCA, PRC2100V
097-22100	Power Conditioning Assembly, PRC2100V
097-23000	Tx Down-converter PCA, PRC2100V
097-24000	Tx Up-converter PCA, PRC2100V
097-25000	AIB Flex Circuit Assembly, PRC2100V
097-50100	Battery Charger PCB Assembly, BC-NM-1
097-50300	Battery Charger Contact PCB Assembly, BC-NM-1
097-60200	Audio, Power Distributor Assembly, MT2100
097-61100	PA Filter Assembly, AM2100
702119	Power Supply Assembly, BC-NM-1

Manuals for the Spectre V

DWC P/N	**Operator** (supplied with unit)	**Technical** (order separately)	**Operator/Technical** (supplied with unit)
AM2100-MS			✓
BC-NM1-MS			✓
BC-NM3-MS			✓
CMS2100-MS			✓
KF2100-MS	✓		
MT2100-MS			✓
PRC2100V-MS		✓	
PRC2100V-MSOP	✓		
PRC2150-MS		✓	
PRC2150-MSOP	✓		
UPS100-28-MS			✓

Note: For a detailed list of Datron documentation, see the Manual section. For system documentation, contact your Datron Representative.

POWER LINE CONDITIONERS, SURGE SUPPRESSERS, AND GROUNDING KITS

Surge Protection

An important part of any radio setup is the proper grounding of the equipment. This will ensure higher reliability and increased protection from surges and lightning. It is beyond the scope of this catalog to describe all potential power protection possibilities. We are however, providing a sample of various products which we offer in order to assist you in properly protecting your equipment. For more information, contact your Datron Representative.

Lightning Protection

Coaxial protectors must be mounted as close as possible to the antenna. They must be properly grounded prior to entering the building.

CLP-N
Coaxial lightning protector, "N-type" connectors, suitable for our "RT" line of radios. Includes an additional 6m length of RG213 coaxial cable.

CLP-U
Coaxial lightning protector, "UHF-type" connectors, suitable for our "TW" line of radios. Includes an additional 6m length of RG213 coaxial cable.

AC Power Line Surge Suppressers

Surge suppressers are used to eliminate short duration-high voltage spikes which could damage equipment. They do not protect you from voltage sags, brownouts, etc. additional custom models are available. For more information, contact your Datron Representative.

ACLP240-15
Surge suppresser, 240 VAC/15 A capacity, supplied with "USA-NEMA" type connectors and plugs. Surge let-through voltage: 700 Vp to 10 kA, 1000 Vp to 20 kA.

ACLP120-15
Surge suppresser, 120 VAC/15 A capacity, supplied with "USA-NEMA" type connectors and plugs. Surge let-through voltage: 400 Vp to 10 kA, 600 Vp to 20 kA.

AC Line Conditioning

AC line conditioning is used to try to maintain a stable voltage at the input of power supplies. They are mostly effective against "brownouts", voltage sags, and fluctuations (when generators are switched in). They do not protect from short duration spikes. For more information, contact your Datron Representative.

Ordering Information for Power Line Conditioners

Power line conditioners are voltage and frequency sensitive. Specify the following when inquiring:

1.	Nominal ac line voltage (i.e., 220, 240, 120, etc.).
2.	Type of line voltage (i.e., single or dual phase, etc.).
3.	Frequency of ac line (i.e., 50 or 60 Hz, etc.)
4.	Maximum capacity (in Amps or VA).
5.	AC plug model (i.e., CEE-7-7, etc.) if an non-NEMA type is required.

Based on the above information, we will be able to provide the appropriate part number.

Rack Grounding Kits

The following are samples of various RF grounding kits offered by Datron. Exact requirements need to be determined prior to order entry. For more information, contact your Datron Representative.

792002
RACK7100 or RACK7500 ground strap kit, includes 72 in. (1.8m) ground strap and accessories.

871096
RACK7100 or RACK7500 equipment grounding strap. One strap is required for each piece of equipment installed in our rack. For more information, contact your Datron Representative.

Grounding Documentation

The following documents provide an overview on grounding techniques. They cover areas such as lightning protection, EMP protection, computers, etc. (100+ pages).

GLEP-E
Lightning and EMP protection. English version.

GLEP-S
Lightning and EMP protection. Spanish version.

SPARES

Spares Introduction

Datron offers spares to support its equipment on many different levels. Depending on the spares philosophy for the individual product, Datron can provide support equipment ranging from consumable (fuses, lamps, etc.) to complete module assemblies that are "plug-and-play" replacements. The spares required to support the equipment listed in this catalog are identified as follows:

1.	Standard Spares Kits
2.	Individual Piece Parts or Modules
3.	Custom Spares

Standard Spares Kits

Standard spares are broken down into three complementary kits: MK, MRK, PSK. These kits are unique and do not include parts which are supplied as part of another kit.

Module Kit (MK)

A module kit contains one complete set of all replaceable printed circuit subassemblies in the product. These are the items which allow the equipment to be repaired by identifying and replacing modules in order to minimize down time. In general, a technician should be able to replace one of these subassemblies using common tools. The number of module kits required depends on the maintenance plan for the equipment. Typically, 2 module kits are held at each field service repair site – 1 for replacements and the other for backup while the defective module is returned to the factory or main service depot for repair.

Module Repair Kit (MRK)

A module repair kit contains all of the spare piece parts necessary to service the printed circuit assemblies in the product. It is designed to support up to 10 pieces of the product for 3 to 5 years. If the maintenance plan is to return all subassemblies to the factory for repair, then the MRKs are not required for equipment support.

Part Spares Kit (PSK)

A part spares kit contains the spare parts (except for basic hardware and wire) necessary to service the product with the exception of the printed circuit assemblies. It therefore contains those spares not contained in the MRK (e.g., chassis parts and front panel components). It is designed to support up to 10 pieces of the product for 3 to 5 years.

Individual Piece Parts and Modules

Individual piece parts for all products may be procured from Datron providing the maintenance philosophy for that product extends down to depot level repair. For more information, contact your Datron Representative.

Individual modules or subassemblies for all products may be procured from Datron.

Custom Spares

Custom spares kits can be configured for any Datron product. The specific configuration of spares necessary to support a given product or group of products depends on the customer's repair philosophy as well as the configuration of the product. Datron Sales and Marketing is prepared to put together custom spares to meet customer requirements.

Notes

The spares requirement is reduced as the quantity of equipment is increased. Suggested levels are:

30 units:	2 spares kits
50 units:	3 spares kits
100 units:	5 spares kits

Make sure that spares kits are ordered for every item and accessory in the system. Custom kits must include the correct power supply options and the internal options that are not included in the basic system price.

MK/MRK/PSK kits will be supplied to reflect current production modules (latest revision level) unless otherwise requested.

If spares kits are required for equipment already in the field, specify any internal options, relative serial number(s), and date purchased so compatible spares kits may be supplied.

Add kit designation to model number to order specific kit(s).

The PSK (Parts Spares Kits) are complete for all equipment not using replaceable modules. When MK (Module Kits) and MRK (Module Repair Kits) are not listed, they are not available and are not required.

System spares do not include spare handsets, microphones, antennas or other accessories that may be required for long-term support of the system.

Spare Module Assemblies, Combined Listing

When ordering spare module assemblies specify module and serial number of equipment.

Note: For information on spare subassemblies not listed, contact your Datron Representative.

DWC P/N	Description
001-00110	Front Panel Switchboard, TW7000, TW7000F
001-00120	Front Panel LCD, TW7000, TW7000F, RT7000
001-00130	Front Panel Keypad Assembly, TW7000
001-00143	Front Panel Processor, TW7000, TW7000F
001-00201	VSWR DET PC, TW7000, TW7000F
001-00203	Reference Control Assembly, RT7000
001-00310	Power Amplifier, TW7000, TW7000F
001-00320	Filter Assembly, TW7000, TW7000F, RT7000
001-00400	Power Supply Assembly, TW7000, TW7000F
001-00600	Audio Assembly, TW7000, TW7000F, RT7000
001-00710	75 MHz IF, TW7000, TW7000F, RT7000
001-00800	5 MHz IF Module, TW7000, TW7000F, RT7000
001-00901	Synthesizer Module, TW7000, TW7000F, RT7000
001-01000	Ref/Control Module, TW7000F
001-01021	High Stability Module, TW7000
001-01100	Processor Assembly, TW7000, TW7000F, RT7000
001-01200	Squelch Assembly, TW7000, TW7000F, RT7000
002-01003	Connector Assembly, TW7000F
003-00002	AT7000F Assembly, TW7000F
003-01003	Connector Assembly, TW7000F
004-01110	Front Panel Processor Assembly, RT7000
004-12260	RF Amplifier Assembly, 12 Vdc, RT7000-12
004-12401	Power Supply/VSWR PC Assembly, RT7000
004-28100	28-12 Vdc Converter Assembly, RT7000-28
004-28260	RF Amplifier Assembly, 28 Vdc, RT7000-28
009-00101	M1 PC Assembly, PRC1099A
009-00201	M2 PC Assembly, PRC1099A
009-00301	M3 PC Assembly, PRC1099A
009-00501	M5 PC Assembly, PRC1099A
009-00603	M6 PC Assembly, PRC1099A
009-00801	DISPLAY PC Assembly, PRC1099A
009-00901	JUNCTION BD Assembly, PRC1099A
009-10701	M7 PC Assembly, PRC1099A
018-00100	Receiver Module, PRC1088
018-00200	Synthesizer Module, PRC1088
018-00300	PA Module, PRC1088
018-00400	Control Module, PRC1088
018-00600	Chassis Subassembly, PRC1088
018-00601	Display Module, PRC1088
018-00700	ECCM/COMSEC Module, PRC1088
021-00300	Battery PCB, KF1088
021-00400	Keyboard Assembly, KF1088
021-00700	Control Module, KF1088
025-00200	Main Module, MT1088
025-00300	Power Supply Module, MT1088
026-00200	Amplifier Module (50W), AM1088
037-00100	RF Board, PRC1060/1070/1080
037-00200	Control Board, PRC1070/1080

DWC P/N	Description
037-00201	Control Board, PRC1060
037-06000	ECCM Board, PRC1080
037-11100	Display Board, PRC1060/70/80
097-10000	Front Panel Assembly, PRC2100V
097-20100	Analog Interface PCA, PRC2100V
097-20200	µProcessor PCA, PRC2100V
097-20300	Feature PCA, PRC2100V
097-20401	LPF, Digital, PCA, PRC2100V
097-20402	LPF, RF, PCA, PRC2100V
097-20800	Power Amplifier Assembly, PRC2100V
097-20900	Rx Converter PCA, PRC2100V
097-21000	IF Demodulation PCA, PRC2100V
097-22100	Power Conditioning Assembly, PRC2100V
097-23000	Tx Down-converter PCA, PRC2100V
097-24000	Tx Up-converter PCA, PRC2100V
097-25000	AIB Flex Circuit Assembly, PRC2100V
097-50100	Battery Charger PCB Assembly, BC-NM-1
097-50300	Battery Charger Contact PCB Assembly, BC-NM-1
097-60200	Audio, Power Distributor Assembly, MT2100
097-61100	PA Filter Assembly, AM2100
1077KY-M1	Audio Module, PRC1077
1077KY-M2	Synthesizer Module, PRC1077

DWC P/N	Description
7000ACH	1000 Memory Channel Option
7000ALE	ALE Option Module
7000ENCR	Encryption Option Module
7000HS	High Stability Option Module
7000NB	Noise Blanker Option Module
7000RCDR	Recorder Option
7000RF	RCU FSK Option Module
7000RI	RCU ISDN Option Module
7000RS	RS422/423/485 Option Module
7000TC	TC/SC/TA Option Module
7000VEM	DSP Voice Enhancement Module
7000WB1	WB Data Filter Option Module
702107	Power Supply Assembly, TW7000F
702119	Power Supply Assembly, BC-NM-1
AM1077PA	PA/Filter Module, AM1077
PRC1077-M3	Processor Module, PRC1077
PRC1077-M4	PA Module, PRC1077
PRC1077-M5	Receiver Module, PRC1077
PRC1077-M6	Display Module, PRC1077
PRC1077-M7	Tuner Module, PRC1077
PRC1099-M4	PA Assembly, PRC1099A
RA1000-MOD	RA1000 Amplifier Assembly
RA100-FILT	FILTER Assembly, RA100
RA100PA-12	PA Assembly, RA100-12
RA100PA-24	PA Assembly, RA100-24
TW1000BMOD	TW1000B Amplifier Assembly
TW100-M8A	Regulator Assembly, MT1077-24, MT-1099A-24

Spares Kits, Combined Listing

DWC Product P/N	Module Kit (MK)	Module Repair Kit (MRK)	Parts Spare Kit (PSK)	Surface Mount Repair Kit (SMRK)
AM-1077	✓	✓	✓	
AM1088	✓	✓	✓	
AM2100	✓	✓	✓	
AT7000B	✓	✓	✓	
BC-NM-1	✓	✓	✓	
KF1088	✓			
KF2100	✓			
MT1060DS	✓	✓	✓	
MT1060MM	✓	✓	✓	
MT-1077-12	✓	✓	✓	
MT-1077-24	✓	✓	✓	
MT1088	✓	✓	✓	
MT-1099A-12	✓	✓	✓	
MT-1099A-24	✓	✓	✓	
MT1099E-12	✓	✓	✓	
MT1099E-24	✓	✓	✓	
MT2100	✓	✓	✓	
MT2100MM			✓	
PF7000			✓	
PRC1060	✓		✓[1]	
PRC1070	✓[2]			
PRC1077	✓	✓	✓	
PRC1077-TS	✓	✓	✓	
PRC1080	✓[2]			
PRC1088	✓	✓	✓	
PRC1099A	✓	✓	✓	
PRC1099-ECU	✓	✓	✓	
PRC2100V	✓		✓	
PRC-BC4	✓	✓	✓	
PRC-PS	✓	✓	✓	
PS1000B			✓	
PS1000SWA			✓	
PS1077	✓	✓	✓	

DWC Product P/N	Module Kit (MK)	Module Repair Kit (MRK)	Parts Spare Kit (PSK)	Surface Mount Repair Kit (SMRK)
PS9000			✓	
RA1000	✓	✓	✓	
RA100-12	✓	✓	✓	
RA100-24	✓	✓	✓	
RA400	✓	✓	✓	
RA400-99	✓	✓	✓	
RAT1000	✓	✓	✓	
RAT7000B	✓	✓	✓	
RT5200	✓		✓	
RT5300	✓		✓	
RT5300PSK			✓	
RT7000-12	✓	✓	✓	✓
RT7000-28	✓	✓	✓	✓
RT7000RF	Use the RT7000-12	Use the RT7000-12	Use the RT7000-12	Use the RT7000-12
RT7000RI	Use the RT7000-28	Use the RT7000-28	Use the RT7000-28	Use the RT7000-28
RT7000RX-12	Use the RT7000-12	Use the RT7000-12	Use the RT7000-12	Use the RT7000-12
RT7000RX-28	Use the RT7000-28	Use the RT7000-28	Use the RT7000-28	Use the RT7000-28
RT7000TX-12	Use the RT7000-12	Use the RT7000-12	Use the RT7000-12	Use the RT7000-12
RT7000TX-28	Use the RT7000-28	Use the RT7000-28	Use the RT7000-28	Use the RT7000-28
RT7201F	✓		✓	
RT7201I	✓		✓	
RUPS100-12			✓	
TW1000B	✓	✓	✓	
TW500B	✓	✓	✓	
TW5300PSK	Part Spares Kit.			
TW5810	✓	✓	✓	
TW5830	✓	✓	✓	
TW5850	✓	✓	✓	
TW5880	✓	✓	✓	
TW7000	✓	✓	✓	✓
TW7000F	✓	✓	✓	✓
TW7000RX	✓	✓	✓	✓
TW7000TX	✓	✓	✓	✓
TW7201E	✓	✓	✓	✓
TW7201F	✓	✓	✓	✓

DWC Product P/N	Module Kit (MK)	Module Repair Kit (MRK)	Parts Spare Kit (PSK)	Surface Mount Repair Kit (SMRK)
TW7201I	✓	✓	✓	✓
TWPP	✓	✓	✓	
TWPSA			✓	
UPF7000			✓	
UPS1000			✓	
UPS1000SWA			✓	
UPS100-28			✓	
UPS500			✓	

Note: To order an individual spares kit, add the appropriate suffix (i.e., -MK, -MRK, -PSK) to the product part number. For a complete list of Module Kit, Module Repair Kit, and Parts Spares Kit, see the Spares section.

1 *The PRC1070 and PRC1080 MK's require a U.S. State Dept. License for export outside the United States.*

2 *The PRC1060 PSK supports the PRC1070 and PRC1080.*

MANUALS

DWC P/N	**Operator** (supplied with unit)	**Technical** (order separately)	**Operator/Technical** (supplied with unit)
5200DTWIN-MSOP	✓		
5200-MS		✓	
9000RAD-MSOP	✓		
ABB1000-MS			✓
ABB100-MS			✓
ALD-MS			✓
ALD-REM-MS			✓
AM-1077-MS		✓	
AM-1077-MSOP	✓		
AM1088-MS			✓
AM2100-MS			✓
AMX-MS			✓
BC-NM1-MS			✓
BC-NM3-MS			✓
CMS1088-MS			✓
CMS2100-MS			✓
DTS-GATEWAY-MSOP	✓		
E5300-MS			✓
HFCOM2-MSOP	✓		
KF1088B-MS			✓
KF1088-MS			✓
KF2100-MS	✓		
MT1060DS-MS			✓
MT1060MM-MS			✓
MT-1077-MS			✓
MT1088-MS			✓
MT-1099A-MS			✓
MT1099E-MS			✓
MT2100-MS			✓

DWC P/N	**Operator** (supplied with unit)	**Technical** (order separately)	**Operator/Technical** (supplied with unit)
PRC1060-MS		✓	
PRC1060-MSOP	✓		
PRC1070/80-MS		✓	
PRC1070/80-MSOP	✓		
PRC1077-ECU/ECSU-MS			✓
PRC1077-MS		✓	
PRC1077-MSOP	✓		
PRC1088-MS		✓	
PRC1088-MSOP	✓		
PRC1099A-MS		✓	
PRC1099A-MSOP	✓		
PRC1099-ECU-MS			✓
PRC2100V-MS		✓	
PRC2100V-MSOP	✓		
PRC2150-MS		✓	
PRC2150-MSOP	✓		
PRC-BC4-MS			✓
PRC-HC-MS			✓
PRC-PS-MS			✓
PRC-SPU-10-MS			✓
PS1000SWA-MS			✓
PS1077-MS			✓
RA1000-MS			✓
RA100-MS		✓	
RA100-MSOP	✓		
RA400-99-MS		✓	
RA400-99-MSOP	✓		
RA400-MS		✓	
RA400-MSOP	✓		
RAT1000-MS		✓	
RAT1000-MSOP	✓		
RAT7000B-MS			✓
RT5200-MS			✓
RT5810-MS			✓

DWC P/N	**Operator** (supplied with unit)	**Technical** (order separately)	**Operator/Technical** (supplied with unit)
RT5830-MS			✓
RT7000-MS		✓	
RT7000-MSOP	✓		
RT7201F-MS		✓	
RT7201F-MSOP	✓		
RT7201I-MS		✓	
RT7201I-MSOP	✓		
RUPS100-12-MS			✓
RUPS100-28-MS			✓
TW/RT110A-MS			✓
TW/RT5200-MS			✓
TW/RT5300-MS			✓
TW110A-MS			✓
TW500B-MS			✓
TW5810-MS			✓
TW5820-MS			✓
TW5850-MS			✓
TW7000F-MS		✓	
TW7000F-MSOP			✓
TW7000MS		✓	
TW7000-MSOP			✓
TW7201F-MS		✓	
TW7201F-MSOP			✓
TW7201I-MS		✓	
TW7201I-MSOP			✓
TW7201-MS		✓	
TW7201-MSOP			✓
TWPP-MS			✓
TWPSA-MS			✓
UPF7000-MS			✓
UPS1000SWA-MS			✓
UPS100-28-MS			✓
UPS500/1000-MS			✓

Note: For a detailed list of Datron documentation, see the Manual section. For system documentation, contact your Datron Representative.

CABLES

DWC P/N	Description
764001	Field wire, 2 conductor.
C991505	N-type connector, RF, 5m.
C991508	UPS1000SWA to RA1000, dc power, 0.6m.
C991510	RT7000 to RA400/RA1000, RF, 0.6m.
C991511	RT7000 to RA400/RA1000/UPF7000, dc power, 0.6m.
C991526	UHF connectors, RF, 5m.
C991535	TW7000 to AT7000B, RF, 5m.
C991539	TW7000 to TW500B/TW1000B, RF, 1m.
C991541	PS1000B/PS1000SWA to TW1000B, dc power (28V), 0.6m.
C991552	RA400 to RAT1000, control, 5m. RAT1000P to RAT1000, control, 5m.
C991557	UPS500, dc power, 0.6m.
C991558	RA400, open-ended, dc power, 0.6m.
C991575	PRC1088 to MT1088, RF, 0.2m. PRC1077 to AM-1077, RF, 0.2m. PRC1099A-antenna, RF, 0.2m.
C991576	PRC1077-ECSU to PRC1077-ECU, control, 0.3m.
C991577	BNC connectors, RF, 5m.
C991578	MT-1077 to antenna, control, 5m (CX4722), for AS-1729/VRC.
C991579	MT-1077 to AM-1077, power, 0.2m.
C991580	Open-ended, dc power, 3m.
C991581	AM-1077 to MT1029, power, 1m.
C991585	MT-1099A to RA100, control, 0.5m.
C991588	MT-1099A to RA100, dc power, 0.6m.
C991608	PRC-PS power/control, 1m.

DWC P/N	Description
C991609	PRC-PS and PRC-BC4, open-ended, dc power, 3m.
C991610	PRC-BC4 to BB-series, charging, 1m.
C991611	PRC-HC-series, charging, 2m.
C991612	BB-series, adapter, 0.3m.
C991613	PRC-SPU-10, power, 2m.
C991614	UPS100-series, power, 1m.
C991617	PRC-SPU-10, charging, 1m.
C991618	PRC-HC-30 to BB-LA6, charging, 1m.
C991620	Antenna tuner, antenna lead-in, 0.5m.
C991641	MT-1099A to PRC1099A, audio, 1m.
C991645	PRC1099A to RA400-9,9 RF, 0.6m.
C991658	MT-1077 to AM1077CONV, power, 1m.
C991659	BB-series, open-ended, charging, 3m.
C991668	PRC1099A to RA100, control, 0.5m.
C991670	12V Input to AM77CONV-A, power, 3m.
C991671	AM77CONV-A to MT-1077-24, power, 0.6m.
C991689	BNC to PL259, RF, 1m.
C991706	TW7000F to AT7000F, coaxial dc power, 7.6m.
C991714	PRC1077-ECU to PRC1077, PRC1077-ECU to PRC1077-ECSU, control, 10m.
C991715	PRC1077-ECSU to PRC1077, control, 0.3m.

DWC P/N	Description
C991720	Dc input power from vehicle to MT1060DS, pigtail on vehicle end, 1m.
C991749	PRC1099ECU-MT1099E, control.
C991829	TW7000, dc power, 2m.
C991830	TW7000E to TW7201E, control/power, 5m.
C991879	TW7000 to PF7000, dc power, 1m.
C991886	TW7000 to RAT1000/TW1000B “Y” control, 5m.
C991888	TW7000 to TW500B, control, 1m.
C991889	TW7000 to TW1000B, control, 1m.
C991890	TW7000 to TWPP, dc power, 2m.
C991894	PC to TW7000, control, 1m.
C991897	TW7000 to TW5810, control, 1m.
C991899	TW7000 to TW110A, control, 1m.
C991901	PC to TW5300, data, 2m.
C991906	TW7000 to RAT1000P, control, 1.3m.
C991907	TW7000 to PS1000SWA, dc power (12V), 1m.
C991921	TW7000 to TW7000IOX, control/data/audio, 2m.
C991925	RT7000 to RA400/RA1000, control, 0.6m.
C991926	RT7000 to RA400/RAT1000, control, antenna tuner, 0.6m.
C991933	RT7000 to RAT1000, control, 5m.
C991936	RT7000 to RT5810-12 and -28 and RT5850-28, control, 1m.
C991937	RT7000 to RT110A, control, 1m.
C991938	TW7000 to AT7000B, control, 5m.
C991941	RT7000 to PF7000, power, 2m.
C991943	RT7000E to RT7201E, control, 9m.
C991945	TW7000F to AT7000F, data, 7.6m.
C991949	Radio to mount, control/power, 0.3m.
C991959	TWPSA to UPF7000, power, 0.9m.
C991963	TW7000 (ACC2) to PC, data, 2m.
C991964	TW7000 (ACC1) to PC, data, 2m.

DWC P/N	Description
C991971	RT7000 to TWPSA, dc power, 1m.
C991973	TWPSA, dc power, 2m.
C991974	RT7000 to PC, data, 1.8m.
C991982	UPS500 to TWPSA, dc power, 1m.
C992002	MT-1099A to RA400-99 tuner, control, 0.75m.
C992003	RA400-99 to RAT1000, control, 5m.
C992007	RT5200 to RT7000 (ACC1), audio, 2.1m.
C992016	RT7000 to RT7000IOX, control/data/audio, 2m.
C992017	TWPSA to TW7000, dc power, 1m.
C992018	TWPSA to PF7000, dc power, 1m.
C992020	TW5830 to TWPSA, dc power, 1m.
C992025	RT5200/5300 to MT1099E, control.
C992034	AC power with standard 115V plug, 1.8m.
C992037	RT5300 to standard PC, 2m.
C992042	RT7201F/RT7201I, dc power, 3m.
C992046	RT7000 to RT5880, control, 1.5m.
C992052	RT7000 to RT5200, control, 2m.
C992060	RT7000 to RT5300, control, 2m.
C992065	TWPSA to RA400, power, 2m.
C992078	MT1060DS to radio, RF coaxial, 0.2m.
C992079	MT1060DS to radio, control, 0.3m.
C992080	MT1060DS to MT1060MM, control, 2m.
C992093	RT7000 to RT5850, control, 2m.
C992094	TW7000 to TW5850, control, 3m.
C992095	MT-1099A to RA400-99, control, 0.6m.
C992097	BNC-M to BNC-M, RF, 0.5m.
C992098	C1010 and C1021, control, 0.7m.
C992099	C1010 to TW7000PP, control, 0.5m.
C992100	TW5200, power and control, 1m.
C992102	Antenna tuner to antenna, RF, 1.2m.
C992111	MT1060DS to MT1060MM, RF coaxial, 2m.

DWC P/N	Description
C992114	TW7000 (ACC1) to PC, audio, 1.8m.
C992115	RT7000 to PC, audio, 1.8m.
C992119	RT7000 to UPS1000SWA, power, 1m.
C992127	RT7000 to C1021 and C992200, Y-cable, 1m.
C992129	PRC1077 to RT5850, control, 0.9m.
C992132	RT7000-ACC2 to DB9, serial, 2m.
C992139	AC with standard 230V plug, 1.8m.
C992142	RT7000 to RAT7000B, control, 5m.
C992143	TW5300 to TW7000, 2m.
C992160	RT7000 (ACC2) to RT5300, audio, 1.8m.
C992161	TW7000-TW5300 to PC-series, control, Y-cable, 2m.
C992162	TW5300 to TW7000 (ACC2) to PC, audio/data 1.5m.
C992172	PRC2100V to AM2100, RF, 0.3m.
C992173	MT2100 to MT2100, auxiliary power, 0.5m.
C992174	PRC2100V, control, 0.3m.
C992175	AM2100 to antenna, RF.
C992176	AM2100 to MT2100, power, 0.3m.
C992177	AM2100 to MT2100, control, 0.5m.
C992195	PRC2100V to antenna, RF, 4.95m.

DWC P/N	Description
C992196	BC-NM-1, dc power, 3.3m.
C992199	AM2100 to two MT2100s, Y-cable, control cable, 3m.
C992200	RT7000 (Y-cable, C992127) to RAT7000B, control, 5m.
C992201	PC to TW110A, control, 2m.
C992202	PC to TW110A, data, 2m.
C992203	RT110A to PC, control, 1.5m.
C992204	RT110A to PC, data, 1.5m.
C992205	RT7110 to PC, data, 1.5m.
C992208	KF2100 to computer, DB9F, 2m.
C992301	MT1099-series mounts to RAT7000B, control.
C992304	Data transmission, 2m.
C992306	RT7000 to remote control head, 10m.
C992307	TW7000 to remote control head, 10m.
C992308	RT7000 unterminated cable, specify length.
C992309	TW7000 unterminated cable, specify length.
CX-4655/ GRC	PRC1077 to OA3633, control, 0.314m.

INDEX

#

1077RETRAN, 8-4
1080ADPT, 7-2
1080KIT, 7-2
1088, 9-5
1088CD, 7-2,9-2
1099AAME, 2-2
1099ALE, 2-2
1099IBC, 2-2
1099TA, 2-2
2100CD, 10-6
2100ECCM, 10-3
2100ECCM-V2, 10-3
2100ENCR, 10-3
2100ENCR-V2, 10-3
2100GPS, 10-3
4242-MK1, 8-9,9-10,10-9
4242-MK2, 7-5,8-9,9-10,10-9
4257, 8-10
7000ACH, 1-3,4-2,5-2
7000ALE, 1-3,4-2,5-2
7000ENCR, 1-3,4-3,5-2
7000EXT, 1-61,4-38,5-4
7000HS, 1-3,4-3,5-2
7000NB, 1-3,4-3,5-2
7000RCDR, 1-3,4-3
7000RF, 1-3,4-3,5-2
7000RI, 1-4,4-3,5-2
7000RS, 1-4,4-3,5-2
7000TC, 1-4,4-3,5-2
7000VEM, 1-4,4-3,5-2
7000WB, 1-4,4-3,5-3
792002, 11-2
871096, 11-2
9000RAD, 6-4
9000RAD-SP, 6-4

A

AAW, 2-9
ABB1000A, 4-8
ABB1000AN, 1-10
ABB1000B, 4-8
ABB1000BN, 1-10
ABB100A, 4-8,5-3
ABB100AN, 1-10,2-10
ABB100B, 4-8,5-3
ABB100BN, 1-10,2-10
AC Line Conditioning, 11-1
AC Power Line Surge Suppressers, 11-1
Accessories, 1-5
  Audio, 2-10,8-3,8-10,9-5,9-10
  Carrying, 9-5
  Mobile Power, 2-11
  Mobile/Fixed Power, 2-11
  Modem, 6-3
  Power Cabling Diagram, 4-7
  PRC1077, 8-4
  PRC1099A, 2-3,2-4
  RF Cabling Diagram, 4-6
  RT7000, 1-5,1-6,1-7,1-8,1-14
  Squad Radio, 7-3
  TW7000, 4-5,4-11
  TW7000F, 5-4,5-5
  Vehicular, 2-10
  Vehicular Control, 8-10
  Vehicular Power, 8-10,9-10
Accessory Equipment
  RT7000, 1-5
  TW7000, 4-4
ACLP120-15, 11-1
ACLP240-15, 11-1
AD1, 4-9
AD2, 4-9
AD3, 4-9
AD4, 4-9
Adapters
  PRC1077, 8-9
  Spectre V, 10-9
  Vehicular, 9-9
AGK, 2-4
ALD, 2-4
ALD-R, 1-10,2-4
ALD-REM, 2-4
ALW, 4-9,5-3
ALW-R, 2-4
AM-1077, 8-9
AM1077ADPT, 8-9
AM-1077ATU, 8-9
AM1077CONV, 8-10
AM1088, 9-10
AM2100, 10-9
AM2100-MNTKIT, 10-9
AM77CONV-A, 8-10
Amplifiers
  PRC1077, 8-9
  PRC1088, 9-10
  PRC1099A, 2-9
  RT7000, 1-5
  TW7000, 4-4
  TW7000F, 5-4
AMX, 1-10,2-10,4-8,5-3

Antenna
Narrow-band, 1-12
Antenna Tuners
PRC1099A, 2-10
RT7000, 1-11
TW7000, 4-9
Antennas
ALD-R, 1-10,2-4
Base, 2-10
Broadband, 1-10,7-3,8-4,9-5
Deployable, 2-10
Fixed, 5-3
Long-Range, 8-4,9-5
Manpack, 7-3,8-4
Narrow-band, 1-10
Portable, 5-3
PRC1099A, 2-4
Spectre V, 10-9
Squad Radio, 7-5
TW7000, 4-8,4-9
TW7000F, 5-3
Vehicular, 2-9,7-5,8-9,9-10,10-9
Wire, 2-4
Assemblies
Combined Listing, 12-3
PRC1077, 8-20
PRC1088, 9-14
Spare Modules, 8-20,9-14
Squad Radio, 7-8
TW7000F, 5-10
AT-271A, 2-4,8-4
AT271BB, 9-5
AT271V, 10-4
AT7000B, 4-9
AT-892, 8-4
AT-892/U, 10-4
AT892BB, 9-5
AT892BB-ADPT, 7-3
Audio Accessories, 2-10
PRC1077, 8-3,8-10
PRC1088, 9-5
PRC1099A, 2-4
RT7000, 1-14
Spectre V, 10-5
Squad Radio, 7-3
TW7000, 4-11
TW7000F, 5-4
AW10, 1-10,4-9,5-3
AW7, 4-9,5-3
AW7-M, 1-10
AWM, 4-9,5-3

B

Batteries
PRC1077, 8-2
PRC1088, 9-3
PRC1099A, 2-2
Squad Radio, 7-3
Battery Chargers
PRC1077, 8-2
PRC1088, 9-4
PRC1099A, 2-3
Squad Radio, 7-3
BB-LA4.6, 8-2,9-3
BB-LA6, 2-2,8-2,9-3
BB-NC4, 2-2,8-2,9-3
BB-NM10, 10-4
BC1060-110, 7-3
BC1060-220, 7-3
BC1060-6-110, 7-3
BC1060-6-220, 7-3
BC-NM-1, 10-4
BC-NM-3, 10-4
Blank Rack Panels
TW7000, 4-27,4-31
BR-2, 9-3

C

C1008, 4-4
C1010, 4-4
C1021, 1-5
C991608, 2-3,8-3,9-4
C991609, 2-3,8-3,9-4
C991610, 2-3,8-3,9-4
C991611, 2-3,8-3,9-4
C991613, 2-3,8-3,9-4
C991617, 2-3,8-3,9-4
C991618, 2-3,8-3,9-4
C991659, 2-11,8-10,9-10
C991949, 9-13
C991965, 4-10
C992159, 9-10
C992191, 10-5
C992303, 7-2,9-2
C992304, 10-5,10-6
Cables
Charging, 2-3,2-11,8-10
Combined List, 14-1
Control Cable Diagram, 1-7
Data Communication, 6-21
PRC1077, 8-3,8-19
PRC1088, 9-4,9-13
PRC1099A, 2-25
Retransmission, 9-5
RF Cabling Diagram, 1-6
RT7000, 1-60
Spectre V, 10-16
Squad Radio, 7-8
TW7000, 4-36
TW7000F, 5-10
Carrying Accessories
PRC1077, 8-4
PRC1088, 9-5
PRC1099A, 2-3
Spectre V, 10-5
Squad Radio, 7-3
CLP-N, 11-1
CLP-U, 11-1
CMS1088, 7-2,9-2
CMS2100, 10-6
Crypto Management Systems
PRC1088, 9-2
Squad Radio, 7-2
Custom Spares, 12-2
CX, 4-9,5-3

D

Data Accessories
Spectre V, 10-5
Data Communication
Manuals, 6-22
Products, 6-1
Software Packages, 6-4
Spares Kits, 6-21
Data Communication Products, 6-6
Data Transceiver
RT7110, 1-3
DM, 4-11,5-4
DSP9000HS, 1-14,2-4,8-4
DTS, 6-4
DTS-Gateway, 6-4
DTWIN, 6-5

E

E5300, 6-2
ECCM and COMSEC Accessories
Spectre V, 10-6
EP, 4-11,5-4
EPL, 4-11,5-4
Equipment Heights
TW7000, 4-27,4-31

F

Fixed Stations, 4-26,4-30

G

GLEP-E, 11-2
GLEP-S, 11-2
Grounding, 2-4,11-1,11-2
Documentation, 11-2

H

H-140, 1-14,2-4,8-4,9-5
H-140/U, 10-5
H2100, 7-3,10-5
H-250, 1-14,2-4,8-4,9-5
H-250/U, 10-5
H3M, 1-14,2-4,7-3,8-4,9-5,10-5
H4595, 7-3
HF Retransmission
Equipment, 1-12
TW7000, 4-10
HF Systems
RM7000, 1-17
RS7000, 1-17
TM7000, 4-15
TS7000, 4-15
TS7100, 4-26
HF Transceivers
PRC1099A, 2-1
RM7100, 1-36
RS7100, 1-36
RS7500, 1-52
RT7000, 1-1
TM7000, 4-15
TS7000, 4-15
TS7100, 4-26
TS7500, 4-30
TW7000, 4-1
TW7000F, 5-1
HFCOM2, 6-5
HP, 4-11
HPR, 1-14
HS1060, 7-3
HSR, 1-14

I

Internal Options
Spectre V, 10-3

K

KEY, 4-11,5-4
Keyfill Device, 9-2,9-3
KF1088, 7-3,9-2
KF1088B, 7-3,9-3
KF2100, 10-6
KYR, 1-14,2-4

L

Languages, 10-3
LC-2, 2-3,8-4,9-5
Lightning Protection, 11-1
LS-R, 2-10,8-10,9-10,10-9
LWA, 2-4

M

Maintenance Kits
RT7000, 1-61
TW7000, 4-38
Manpack
PRC1077, 8-1,8-2
Manpack Antennas, 9-5
Squad Radio, 7-3
Manpack System, 2-5
PRC1077, 8-5
PRC1088, 9-6
Spectre V, 10-7
Manpack Transceiver
PRC1088, 9-1
PRC1099A, 2-1
Manuals
Combined Listing, 13-1
Data Communcation, 6-22
PRC1077, 8-21
PRC1088, 9-14
PRC1099A, 2-27
RT7000, 1-63
Spectre V, 10-17
Squad Radio, 7-9
TW7000, 4-39
TW7000F, 5-11
MAR-12, 1-10,2-9
MAR-16, 1-10,2-10
MAR-16T, 1-10,2-10
MDR, 1-14
MHS, 1-14,2-4,5-4,7-3,8-4,9-5
MHS (H-189/U), 10-5
Miscellaneous Accessories
TW7000, 4-4
Mobile Mounts, 1-13
Mobile Station
High-Power,
7-4,10-11,10-14,10-15
Low-Power,
7-4,10-10,10-12,10-13
Modems
110A-Series, 6-3
5200-Series, 6-2

5300-Series, 6-2
Accessories, 6-3
Module
Kit (MK), 12-1
Repair Kit (MRK), 12-1
Mounting Kits
RT7000, 1-13
TW7000, 4-11
Mounts
Kits, 4-11
Mobile, 1-13
Monopod, 9-4
Rack, 1-13
Shock, 1-13,2-9,8-9,9-9
Stack Kits, 1-14
Tree, 8-3,9-4
Vehicle, 2-9
Vehicular, 7-5,8-9
MRR, 1-14
MT-1029, 8-9,9-9
MT1060DS, 7-5
MT1060MM, 7-5
MT-1077-12, 8-9
MT-1077-24, 8-9
MT1088, 9-9
MT-1099A-12, 2-9
MT-1099A-24, 2-9
MT1099E-24, 2-9
MT2100, 10-9
MT2100DC-OUT, 10-9
MT2100MM, 10-9
MT2100-MNTKIT, 10-9
MT2100-VIC, 10-9

N

Narrow-band Antenna, 1-12
Notes, 12-2
NTN4905A, 7-3
NVISKIT, 1-10,2-10

O

OA3633, 8-9
OE-254, 8-4,9-5
OE-254/GRC, 10-4
Options
PRC1077, 8-2
PRC1099A, 2-2
RT7000, 1-3
TW7000, 4-2
TW7000F, 5-2,5-4

P

Part Spares Kit (PSK), 12-1
PF3000-110, 4-8
PF3000-220, 4-8
PF3000RM, 4-8
PF7000, 4-8
PF7000RM, 4-8,4-11
Piece Parts, 12-1
PM, 4-11,5-4
Portable Power Source
TW7000F, 5-3
Power
Line Conditioners, 11-1
Power Accessories
PRC1099A, 2-11
Power Cabling Diagram
TW7000, 4-7
Power Supplies
PRC1077, 8-2
PRC1088, 9-4
PRC1099A, 2-3
RT7000, 1-9
Spectre V, 10-4
TW7000, 4-8
TW7000F, 5-3
Powerline Conditioners
Line Conditioners Ordering Information, 11-2
PRC1060, 7-2
PRC1070, 7-1,7-2
PRC1077, 8-1,8-2
Amplifiers, 8-9
Antennas, 8-4
Audio Accessories, 8-3,8-10
Batteries, 8-2
Battery Chargers, 8-2
Cables, 8-19
Carrying Accessories, 8-4
Charging Cables, 8-3
Manpack System, 8-5
Manuals, 8-21
Options, 8-2
Power Supplies, 8-2
Retransmission Equipment, 8-4
Spare Module Assemblies, 8-20
Vehicular Antennas, 8-9
Vehicular Control, 8-10
Vehicular Mounts and Adapters, 8-9
Vehicular Power Accessories, 8-10
PRC1077-ECO, 8-2
PRC1077-ECSU, 8-10
PRC1077-ECU, 8-10
PRC1077-TS, 8-2
PRC1080, 7-1,7-2
PRC1088, 9-1,9-2,9-9
Amplifier, 9-10
Antennas, 9-5
Audio Accessories, 9-5
Batteries, 9-3
Battery Chargers, 9-4
Cables, 9-13
Carrying Accessories, 9-5
Charging Cables, 9-4
Manpack System, 9-6
Manuals, 9-14
Power Supplies, 9-4
Retransmission Equipment, 9-5,9-10
Spare Module Assemblies, 9-14
Spares Kits, 9-13
Vehicular Adapters, 9-9
Vehicular Antennas, 9-10
Vehicular Audio Accessories, 9-10
Vehicular Power Accessories, 9-10
PRC1099A, 2-1,2-2,2-6,2-7
Amplifier, 2-9
Antennas, 2-4,2-10
Audio Accessories, 2-4
Batteries, 2-2
Battery Charger, 2-3
Cables, 2-25

Carrying Accessories, 2-3
Charging Cables, 2-3
Manpack System, 2-5
Manuals, 2-27
Options, 2-2
Power Accessories, 2-11
Power Supplies, 2-3
Spare Module Assemblies, 2-26
Spares Kits, 2-26
System Descriptions, 2-8
Vehicular Adapters, 2-9
Vehicular Antenna Tuners, 2-10
Vehicular Systems, 2-8
PRC1099-ECU, 2-11
PRC2100V, 10-2
PRC2150, 10-2
PRC-BC4, 2-3,2-6,8-2,8-6,9-4,9-7
PRC-BCD-20, 8-2,9-3
PRC-CA12V, 2-11,8-10,9-10
PRC-HC-15/30, 8-7,9-8
PRC-HC-30, 2-3,2-7,8-3,9-4
PRC-HC-MP, 2-3,8-3,9-4
PRC-HC-TM, 2-3,8-3,9-4
PRC-PS, 2-3,2-6,8-3,8-6,9-4,9-7
PRC-SPU-10, 2-3,2-7,8-3,8-7,9-4,9-8
Pre/Postselector, 1-12
TW7000, 4-11
PS1000B, 4-8
PS1000SWA, 4-8
PS1077, 8-9

R

RA1000, 1-5
RA1000-RM, 1-13
RA1000-SM, 1-13
RA100-12, 2-9
RA100-24, 2-9
RA100-MM, 2-9
RA400, 1-5
RA400-99, 2-9
RA400RM, 1-13
RA400-SM, 1-13
Rack Cabinets
TW7000, 4-26,4-30
TW7100, 4-26
RACK7100, 4-26
RACK7100-220, 4-26
RACK7100-220-OD, 1-13,4-26
RACK7100-OD, 1-13,4-26
RACK7500, 4-30
RACK7500-200-OD, 4-30
RACK7500-220, 4-30
RACK7500-220-OD, 1-13
RACK7500-OD, 1-14,4-30
Racks
RT7000, 1-13
RA-MAS, 1-11,2-10
RA-PAS, 1-11,2-10
RAT1000, 1-11,2-10,4-9
RAT1000P, 4-9
RAT1000-SM, 1-13,2-9
RAT7000B, 1-11,1-12,2-10
Remote Controls
RT7000, 1-4
TW7000, 4-3
TW7000F, 5-3
Retransmission Equipment
PRC1077, 8-4
PRC1088, 9-5,9-10
RT7000, 1-12
Spectre V, 10-5
RF Cabling Diagram, 4-6
RM7000, 1-17
RM7100, 1-36
RS232, 5-2
RS7000, 1-17
RS7100, 1-36
RS7500, 1-52
RT110A-12, 6-3
RT110A-24, 6-3
RT110A-SM, 1-13,6-3
RT5200, 6-2
RT5200SM, 1-13,2-9,6-3
RT5300, 6-2
RT5300-SM, 1-13,6-3
RT5810, 1-11
RT5810-12, 1-11
RT5810-220, 1-11
RT5810-28, 1-11
RT5820, 1-12
RT5820-12, 1-12
RT5820-220, 1-12
RT5820-28, 1-12
RT5830, 1-12
RT5850, 1-11
RT5850-28, 1-11
RT5880, 1-11
RT5880-220, 1-11
RT7000
Accessory Equipment, 1-5
Amplifiers, 1-5
Antenna Tuners, 1-11
Antennas, 1-10
Audio Accessories, 1-14
Cables, 1-60
Control Cabling Diagram, 1-7
Maintenance Kits, 1-61
Manuals, 1-63
Mobile Mounts, 1-13
Mounting Kits, 1-13
Mounts, 1-13
Options, 1-3
Power Cabling Diagram, 1-8
Power Supplies, 1-9
Pre/Postselector, 1-12
Remote Control, 1-4
RF Cabling Diagram, 1-6
Shock Mounts, 1-13
Spare Module Assemblies, 1-61
Spares Kits, 1-62
Stack Mount Kits, 1-14
System Configurations, 1-15
System Descriptions, 1-15

Telephone Interface Device, 1-11
RT7000 HF Transciever, 1-1
RT7000-12, 1-2
RT7000-28, 1-2
RT7000C-12, 1-2
RT7000C-28, 1-2
RT7000E-12, 1-2
RT7000E-28, 1-2
RT7000FAN-1, 1-5
RT7000IOX, 1-5
RT7000PP-12, 1-2
RT7000PP-28, 1-2
RT7000RF-12, 1-2
RT7000RF-28, 1-2
RT7000RI-12, 1-2
RT7000RI-28, 1-2
RT7000RM, 1-14
RT7000RMS, 1-14
RT7000RX-12, 1-2
RT7000RX-28, 1-2
RT7000TK, 1-61
RT7000TX-12, 1-2
RT7000TX-28, 1-2
RT7201E, 1-4
RT7201F, 1-4
RT7201I, 1-4
RT7201MM, 1-13
RT-MT, 1-14
RUBANTBB, 7-3
RUPS100-12, 1-9,2-11,8-10

S

SDX-GO6, 9-3
SELCALL, 5-2
Shock Mounts, 1-13
SMTRK, 1-61,4-38,5-4
Software Packages
Data Communication, 6-4
Spare Module Assemblies
Combined Listing, 12-3
PRC1099A, 2-26
RT7000, 1-61
Spectre V, 10-16
Squad Radio, 7-8
TW7000, 4-38
TW7000F, 5-10
Spares, 12-1
Custom, 12-2
Spares Kits
Combined Listing, 12-5
Data Communication, 6-21
PRC1077, 8-20
PRC1088, 9-13
PRC1099A, 2-26
RT7000, 1-62
Spectre V, 10-16
Squad Radio, 7-8
TW7000, 4-37
TW7000F, 5-11
Spectre V
Antennas, 10-9
Cables, 10-16
Features, 10-2
Manpack System, 10-7
Manuals, 10-17
Spare Module Assemblies, 10-16
Spares Kits, 10-16
Transceivers, 10-1,10-2
Vehicular Adapters, 10-9
Vehicular Amplifier, 10-9
Vehicular Audio Accessories, 10-9
Vehicular Configurations, 10-8
Vehicular Power Accessories, 10-9
Squad Radio, 7-2
Audio Accessories, 7-3
Batteries, 7-3
Battery Chargers, 7-3
Cables, 7-8
Carrying Accessories, 7-3
Color, 7-2
Crypto Management Systems, 7-2
Manpack Antennas, 7-3
Manuals, 7-9
Spare Module Assemblies, 7-8
Upgrade Kit, 7-2
Vehicular Antennas, 7-5
Vehicular Mounts, 7-5
ST1060BLK, 7-3
ST1060GRN, 7-3
Standard Spares Kits, 12-1
Stationary Dipole Antennas
TW7000, 4-9
Surge Protection, 11-1
Surge Suppressers, 11-1
System Configurations, 1-15
System Descriptions
PRC1077, 8-8
PRC1099A, 2-8
TW7000, 4-13

T

Tactical Antennas
Spectre V, 10-4
Tactical Manpack
PRC1088, 9-2
PRC1099A, 2-2
Telephone Coupler
TW7000F, 5-4
Telephone Interface Devices, 1-11
TW7000, 4-10
TM7000, 4-15
Tranceiver
HF TW7000F, 4-1
TRANSADAPT, 5-2
TRANSCALL, 5-2
Transceivers
HF RM7100, 1-36
HF TS7500, 4-30
HF TW7000F, 5-1
PRC1088, 9-1
Spectre V, 10-1
VHF PRC1077, 8-1
TS7000, 4-15
TS7100, 4-26
TS7500, 4-30
TW1000B, 4-4
TW110A, 6-3
TW500B-RMS, 4-4,5-4
TW500B-S, 4-4,5-4

TW5200, 6-2
TW5300, 6-3
TW5300F, 6-3
TW5810, 4-10
TW5810-12, 4-10
TW5810-28, 4-10
TW5810RMS, 4-11
TW5820, 4-10
TW5820-12, 4-10
TW5820-28, 4-10
TW5830, 4-11
TW5830RMS, 4-11
TW5850, 4-10,5-4
TW5880, 4-10
TW5880RMS, 4-11
TW7000, 4-1,4-2
  Accessory Equipment, 4-4
  Amplifiers, 4-4
  Antenna Tuners, 4-9
  Antennas, 4-8,4-9
  Audio Accessories, 4-11
  Blank Rack Panels, 4-27,4-31
  Cables, 4-36
  Control Cabling Diagram, 4-5
  Equipment Heights for Racking, 4-27,4-31
  HF Retransmission, 4-10
  Maintenance Kits, 4-38
  Manuals, 4-39
  Mounting Kits, 4-11
  Options, 4-2
  Power Cabling Diagram, 4-7
  Power Supplies, 4-8
  Pre/Postselector, 4-11
  Rack Cabinets, 4-30
  RF Cabling Diagram, 4-6
  Spare Module Assemblies, 4-38
  Spares Kits, 4-37
  System Configurations, 4-13
  Telephone Interface Devices, 4-10
  Transceivers, 4-2
  Transciever Remote Controls, 4-3
  VHF Retransmission, 4-10
TW7000C, 4-2
TW7000E, 4-2
TW7000F, 5-1
  Accessories, 5-4,5-5
  Amplifiers, 5-4
  Antennas, 5-3
  Audio Accessories, 5-4
  Cables, 5-10
  Manuals, 5-11
  Options, 5-2,5-4
  Portable Power Supply, 5-3
  Remote Control, 5-3
  Spare Module Assemblies, 5-10
  Spares Kits, 5-11
  Telephone Coupler, 5-4
  Untuned Antennas, 5-3
TW7000FACC, 5-4
TW7000FTK, 5-4
TW7000I0X, 4-4
TW7000PP, 4-2
TW7000RF, 4-2
TW7000RI, 4-2
TW7000RM, 4-11
TW7000RMS, 4-11
TW7000RX, 4-2
TW7000SM, 4-11
TW7000TK, 4-38
TW7000TX, 4-2
TW7201E, 4-3
TW7201F, 4-4,5-3
TW7201I, 4-4,5-3
TW7201MM, 4-11
TW7201RM, 4-11
TWPP, 5-3
TWPSA, 1-9,4-8

U

UNIV-SM, 1-13, 2-9
Untuned Antennas
  TW7000F, 5-3
UPF7000-12, 1-9
UPF7000-12-220, 1-9
UPF7000-28, 1-9,2-11
UPF7000-28-200, 1-9
UPF7000RM, 1-14
Upgrade Kits
  Squad Radio, 7-2
UPS1000, 1-9
UPS1000-RM, 1-14
UPS1000-SM, 1-13
UPS1000SWA, 1-9
UPS1000SWARM, 1-14
UPS1000SWARMS, 1-14
UPS100-28, 1-9,2-11,8-10,9-10,10-9
UPS500, 1-9,2-11
UPS500-SM, 1-13

V

Vehicular
  Accessories, 2-10, 8-10, 9-10, 10-9
  Antennas, 9-10, 2-9
  Configurations, 10-9
  Spectre V, 10-8
Vehicular Adapters
  PRC1099A, 2-9
Vehicular Amplifier
  Spectre V, 10-9
Vehicular Antenna Tuners
  PRC1099A, 2-10
Vehicular Audio Accessories
  PRC1088, 9-10
Vehicular Configurations
  Squad Radio, 7-4
Vehicular Control Accessories
  PRC1077, 8-10
Vehicular Systems, 7-4
  PRC1077, 8-8
  PRC1088, 9-9
  PRC1099A, 2-8
  Spectre V, 10-10
VHF Retransmission
  RT7000, 1-12
  TW7000, 4-10
VHF Transceivers
  PRC1060/1070/1080, 7-1
  PRC1077, 8-1,8-8
  PRC1088, 9-1,9-9